BeCool
www.becoolfan.com

9225 Axial Series

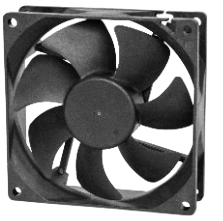

Demensions: 92X92X25 mm
Bearing Type: FDB,Hydraulic,Ball Bearing
Function Type: FG/RD Signal,PWM pulse
Protection: Auto Restart Protection or General Options

SPECIFICATIONS

MODEL NO	VOLTAGE	CURRENT	POWER	SPEED	AIR FLOW		STATIC PRESSURE		NOISE	CURVE
	V	A	W	RPM	CMM	CFM	mmH_2O	INH_2O	(dBA)	
AD9225B/R12L-N(P/M)	12	0.21	2.52	1800	0.805	28.43	1.35	0.053	26.7	L
AD9225B/R12ML-N(P/M)	12	0.40	4.80	2800	1.319	46.57	3.27	0.129	34.1	M
AD9225B/R12H-N(P/M)	12	0.61	7.20	4000	1.908	67.38	6.03	0.237	44.8	H
AD9225B12U-N(P/M)	12	1.20	14.40	6000	2.564	90.57	13.58	0.534	53.6	U
AD9225B/R24L-N(P/M)	24	0.15	3.60	1800	0.805	28.43	1.35	0.053	26.7	L
AD9225B/R24M-N(P/M)	24	0.30	7.20	2800	1.319	46.57	3.27	0.129	34.1	M
AD9225B/R24H-N(P/M)	24	0.80	19.20	4000	1.908	67.38	6.03	0.237	44.8	H
AD9225B24U-N(P/M)	24	0.75	18.00	6000	2.564	90.57	13.58	0.534	53.6	U
AD9225B/R48L-N(P/M)	48	0.12	5.76	1800	0.805	28.43	1.35	0.053	26.7	L
AD9225B/R48M-N(P/M)	48	0.21	10.08	2800	1.319	46.57	3.27	0.129	34.1	M
AD9225B/R48H-N(P/M)	48	0.45	21.60	4000	1.908	67.38	6.03	0.237	44.8	H
AD9225B48U-N(P/M)	48	0.50	24.00	6000	2.564	90.57	13.58	0.534	53.6	U

PERFORMANCE CURVES

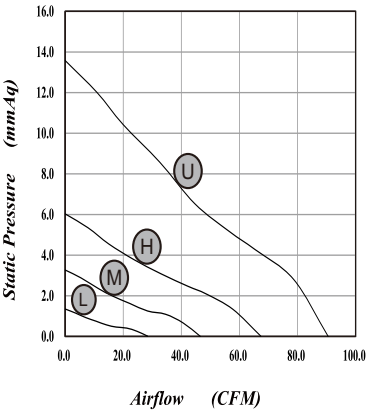

DIMENSIONS DRAWING

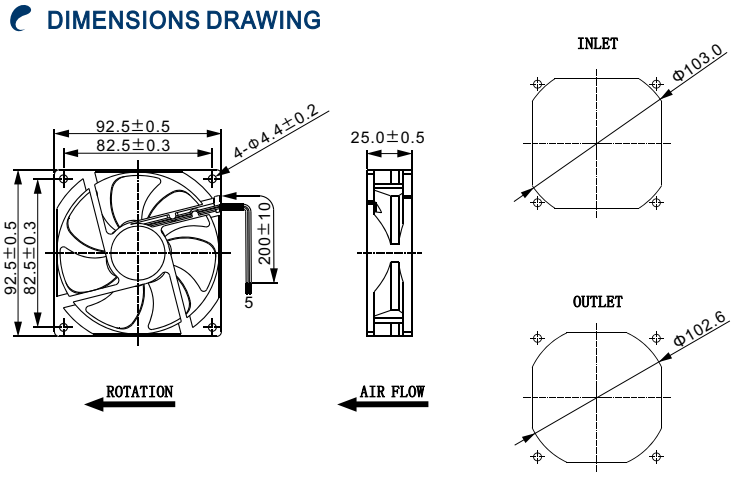

*Specifications are subject to change without notice