BeCool
www.becoolfan.com

8015 Triangle Fan Series



Demensions: 80X80X15 mm
Bearing Type: Hydraulic,Ball Bearing
Function Type: FG/RD Signal,PWM pulse
Protection: Auto Restart Protection or General Options

SPECIFICATIONS

MODEL NO	VOLTAGE	CURRENT	POWER	SPEED	AIR FLOW		STATIC PRESSURE		NOISE	CURVE
	V	A	W	RPM	CMM	CFM	mmH_2O	INH_2O	(dBA)	
8015S(B/R)VL-N(P/M)5	5	0.25	1.25	2000	0.554	19.56	1.21	0.048	26.9	L
8015S(B/R)VM-N(P/M)5	5	0.40	2.00	3000	0.887	31.34	2.81	0.111	35.4	M
8015S(B/R)VH-N(P/M)5	5	0.70	3.50	4000	1.183	41.79	4.57	0.180	42.6	H
8015S(B/R)VL-N(P/M)1	12	0.15	1.80	2000	0.554	19.56	1.21	0.048	26.9	L
8015S(B/R)VM-N(P/M)1	12	0.32	3.84	3000	0.887	31.34	2.81	0.111	35.4	M
8015S(B/R)VH-N(P/M)1	12	0.60	7.20	4000	1.183	41.79	4.57	0.180	42.6	H
8015S(B/R)VL-N(P/M)2	24	0.10	2.40	2000	0.554	19.56	1.21	0.048	26.9	L
8015S(B/R)VM-N(P/M)2	24	0.18	4.32	3000	0.887	31.34	2.81	0.111	35.4	M
8015S(B/R)VH-N(P/M)2	24	0.45	10.80	4000	1.183	41.79	4.57	0.180	42.6	H

PERFORMANCE CURVES

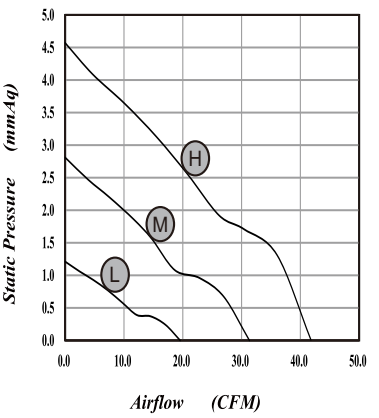

DIMENSIONS DRAWING

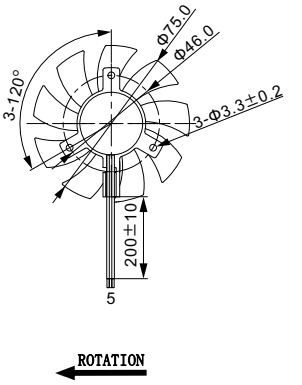

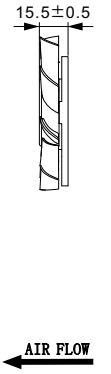

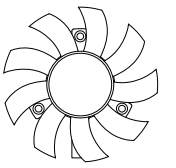

*Specifications are subject to change without notice