www.becoolfan.com

BeCool Fan Catalogue

Axial Fan Series

2006 (20x20x06) ----------1
2010 (20x20x10) ----------2
2507 (25x25x07) ----------3
2510 (25x25x10) ----------4
3007 (30x30x07) ----------5
3010 (30x30x10) ----------6
3015 (30x30x15) ----------7
3510 (35x35x10) ----------8
4007 (40x40x07) ----------9
4010-1 (40x40x10) ---------10
4010-2 (40x40x10) ---------11
4015 (40x40x15)----------12
4020-1 (40x40x20) ---------13
4020-2 (40x40x20) ---------14
4020-3 (40x40x20) ---------15
4028-1 (40x40x28) ---------16
4028-2 (40x40x28) ---------17
4028-3 (40x40x28) ---------18
4056 (40x40x56)----------19
4510 (45x45x10)----------20
5010 (50x50x10)----------21
5015 (50x50x15)----------22
5020 (50x50x50)----------23
6010 (60x60x10)----------24
6015 (60x60x15)----------25
6020 (60x60x20)----------26
6025-1 (60x60x25) ---------27
6025-2 (60x60x25) ---------28
6038-1 (60x60x38) ---------29
6038-2 (60x60x38) ---------30
6056-1 (60x60x56) ---------31
6056-2 (60x60x56) ---------32
7010 (70x70x10)----------33
7015 (70x70x15)----------34
7020 (70x70x20)----------35
7025-1 (70x70x25) ---------36
7025-2 (70x70x25) ---------37
8010 (80x80x10)----------38
8015 (80x80x15)----------39
8020 (80x80x20)----------40
8025-1 (80x80x25) ---------41
8025-2 (80x80x25) ---------42
8025-3 (80x80x25) ---------43
8038-1 (80x80x38)----------44
8038-2 (80x80x38)----------45
8038-3 (80x80x38)----------46
8056 (80x80x56) ----------47
9025 (95x95x25) ----------48
9215 (92x92x15) ----------49
9225 (92x92x25) ----------50
9232 (92x92x32) ----------51
9238-1 (92x92x38)----------52
9238-2 (92x92x38)----------53
12025-1 (120x120x25) -----54
12025-2 (120x120x25) -----55
12025-3 (120x120x25) -----56
12032 (120x120x32)--------57
12038-1 (120x120x38) -----58
12038-2 (120x120x38) -----59
12038-3 (120x120x38) -----60
14025 (140x140x25)--------61
14038 (140x140x38)--------62
15050 (150x150x50)--------63
17251-1 (172x151x51) -----64
17251-2 (172x151x51) -----65
18032 (180x180x32)--------66

Triangle Fan Series

3007 (30x30x07) ----------67
3010 (30x30x10) ----------68
3510 (35x35x10) ----------69
4007 (40x40x07) ----------70
4010 (40x40x10) ----------71
5008 (50x50x08) ----------72
5010 (50x50x10) ----------73
6008 (60x60x08) ----------74
6010 (60x60x10) ----------75
6015 (60x60x15) ----------76
6025 (60x60x25) ----------77
7010 (70x70x10) ----------78
7015 (70x70x15) ----------79
7025 (70x70x25) ----------80
8010 (80x80x10) ----------81
8015 (80x80x15) ----------82
8020 (80x80x20) ----------83
8025 (80x80x25) ----------84
9215 (92x92x15) ----------85
9225 (92x92x25) ----------86

Blower Series

2006 (20x20x06) ----------87
3004 (30x30x04) ----------88
3007 (30x30x07) ----------89
3010 (30x30x10) ----------90
4010 (40x40x10) ----------91
4020 (40x40x20) ----------92
4510 (45x45x10) ----------93
5008 (60x45.5x08) ----------94
5010 (50x50x10) ----------95
5015-1 (50x50x15) ----------96
5015-2 (50x50x15) ----------97
5020 (50x50x20) ----------98
6004 (60x60x04) ----------99
6008 (70x68.2x08) --------100
6015-1 (60x60x15) --------101
6015-2 (60x60x15) --------102
6025 (60x60x25)----------103
6028 (60x60x28)----------104
7015 (77x75x15.5) --------105
7525 (75x74.5x25) --------106
7530 (75x75x30)----------107
8015 (79.5x77x15) --------108
8018 (80x80x17.5) --------109
9733-1 (97x94x33) --------110
9733-2 (97x94x33) --------111
12032 (120x120x32) ------112

Centrifugal Fan Series

10025 (Φ100x26) ----------113
11025 (Φ110x26) ----------114
133 (Φ133x69) ----------115
175 (Φ175x69) ----------116
190 (Φ189x69) ----------117
225 (Φ225x99) ----------118
250 (Φ250x92.8) ----------119

www.becoolfan.com

2006 Axial Series



Demensions: 20X20X06 mm

Bearing Type: Hydraulic

Function Type: FG/RD Signal,PWM pulse

Protection: Auto Restart Protection or General Options

SPECIFICATIONS

MODEL NO	VOLTAGE	CURRENT	POWER	SPEED	AIR FLOW		STATIC PRESSURE		NOISE	CURVE
	V	A	W	RPM	CMM	CFM	mmH_2O	INH_2O	(dBA)	
2006RVL-N(P/M)5	5	0.10	0.50	9000	0.018	0.64	0.96	0.038	17.7	L
2006RVM-N(P/M)5	5	0.15	0.75	13000	0.030	1.05	2.13	0.084	26.1	M
2006RVH-N(P/M)5	5	0.20	1.00	17000	0.040	1.43	3.26	0.128	33.3	H
2006RVL-N(P/M)1	12	0.06	0.72	9000	0.018	0.64	0.96	0.038	17.7	L
2006RVM-N(P/M)1	12	0.10	1.20	13000	0.030	1.05	2.13	0.084	26.1	M
2006RVH-N(P/M)1	12	0.15	1.80	17000	0.040	1.43	3.26	0.128	33.3	H

PERFORMANCE CURVES

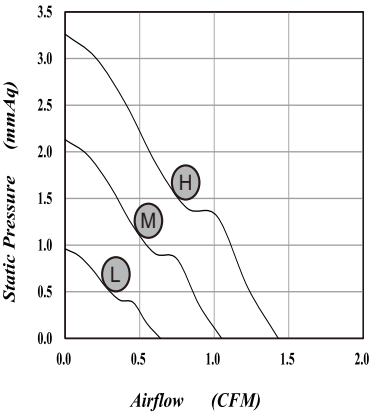

DIMENSIONS DRAWING

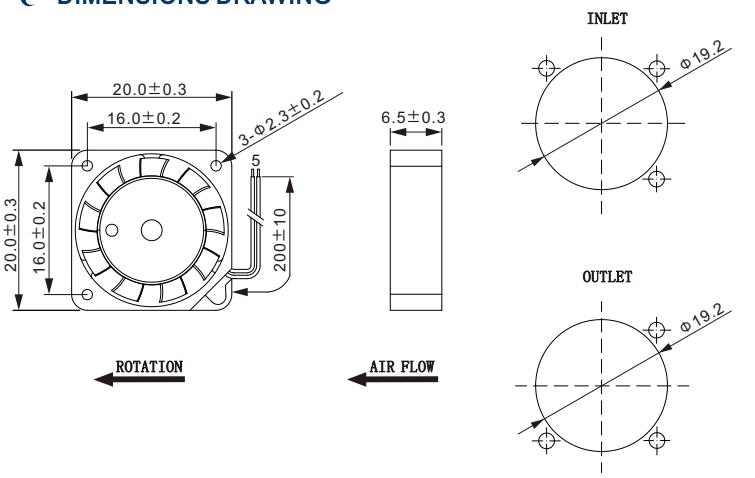

*Specifications are subject to change without notice

BeCool
www.becoolfan.com

2010 Axial Series



Demensions: 20X20X10 mm
Bearing Type: Hydraulic,Ball Bearing
Function Type: FG/RD Signal,PWM pulse
Protection: Auto Restart Protection or General Options

SPECIFICATIONS

MODEL NO	VOLTAGE	CURRENT	POWER	SPEED	AIR FLOW		STATIC PRESSURE		NOISE	CURVE
	V	A	W	RPM	CMM	CFM	mmH_2O	INH_2O	(dBA)	
2010B/RVL-N(P/M)5	5	0.10	0.50	9000	0.023	0.81	1.47	0.058	13.6	L
2010B/RVM-N(P/M)5	5	0.15	0.75	13000	0.035	1.23	2.90	0.114	22.1	M
2010B/RVH-N(P/M)5	5	0.20	1.00	17000	0.048	1.71	4.64	0.183	28.3	H
2010B/RVL-N(P/M)1	12	0.06	0.72	9000	0.023	0.81	1.47	0.058	13.6	L
2010B/RVM-N(P/M)1	12	0.10	1.20	13000	0.035	1.23	2.90	0.114	22.1	M
2010B/RVH-N(P/M)1	12	0.15	1.80	17000	0.048	1.71	4.64	0.183	28.3	H

PERFORMANCE CURVES

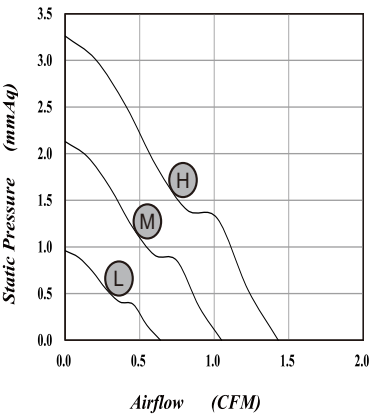

DIMENSIONS DRAWING

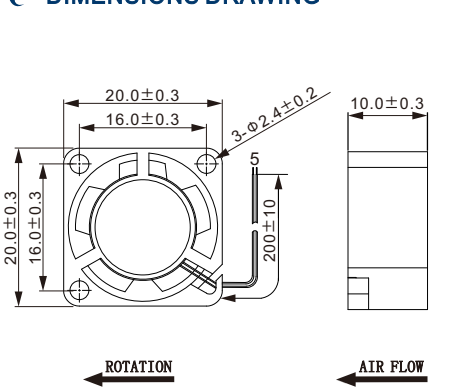

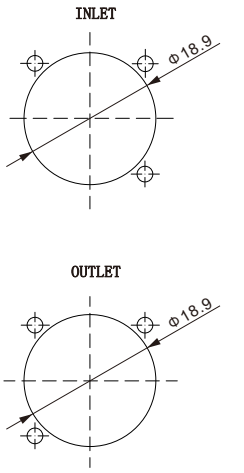

*Specifications are subject to change without notice

www.becoolfan.com

2507 Axial Series



Demensions: 25X25X07 mm

Bearing Type: FDB,Hydraulic

Function Type: FG/RD Signal,PWM pulse

Protection: Auto Restart Protection or General Options

SPECIFICATIONS

MODEL NO	VOLTAGE	CURRENT	POWER	SPEED	AIR FLOW		STATIC PRESSURE		NOISE	CURVE
	V	A	W	RPM	CMM	CFM	mmH_2O	INH_2O	(dBA)	
2507RVL-N(P/M)5	5	0.10	0.50	8000	0.035	1.25	2.30	0.091	19.8	L
2507RVM-N(P/M)5	5	0.15	0.75	11000	0.051	1.79	4.21	0.166	28.5	M
2507RVH-N(P/M)5	5	0.20	1.00	14000	0.067	2.37	6.92	0.272	34.7	H
2507RVL-N(P/M)1	12	0.06	0.72	8000	0.035	1.25	2.30	0.091	13.6	L
2507RVM-N(P/M)1	12	0.10	1.20	11000	0.051	1.79	4.21	0.166	22.1	M
2507RVH-N(P/M)1	12	0.15	1.80	14000	0.067	2.37	6.92	0.272	28.3	H

PERFORMANCE CURVES

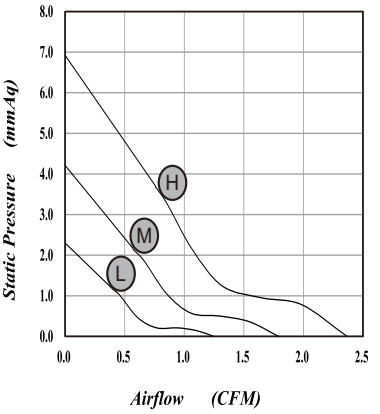

DIMENSIONS DRAWING

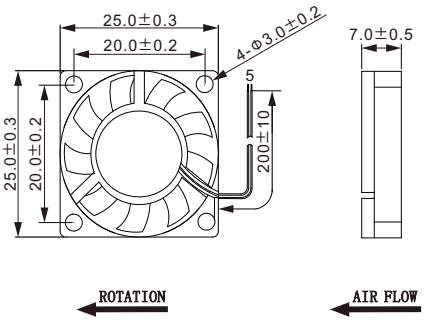

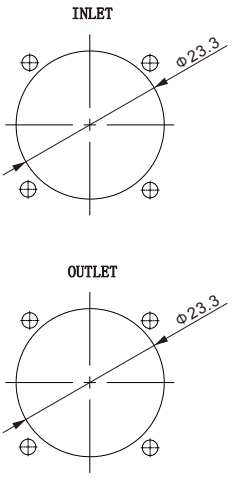

*Specifications are subject to change without notice

BeCool
www.becoolfan.com

2510 Axial Series

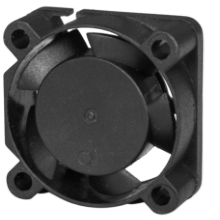

Demensions: 25X25X10 mm
Bearing Type: FDB,Hydraulic,Ball Bearing
Function Type: FG/RD Signal,PWM pulse
Protection: Auto Restart Protection or General Options

SPECIFICATIONS

MODEL NO	VOLTAGE	CURRENT	POWER	SPEED	AIR FLOW		STATIC PRESSURE		NOISE	CURVE
	V	A	W	RPM	CMM	CFM	mmH_2O	INH_2O	(dBA)	
2510B/RVL-N(P)5	5	0.18	0.90	7000	0.031	1.11	2.30	0.091	20.9	L
2510B/RVM-N(P)5	5	0.25	1.25	10000	0.055	1.93	4.55	0.179	22.9	M
2510B/RVH-N(P)5	5	0.32	1.60	13000	0.062	2.20	7.26	0.286	29.3	H
2510B/RVL-N(P)1	12	0.18	2.16	7000	0.031	1.11	2.30	0.091	20.9	L
2510B/RVM-N(P)1	12	0.25	3.00	10000	0.055	1.93	4.55	0.179	22.9	M
2510B/RVH-N(P)1	12	0.32	3.84	13000	0.062	2.20	7.26	0.286	29.3	H

PERFORMANCE CURVES

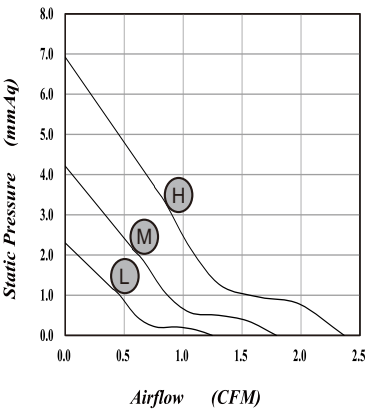

DIMENSIONS DRAWING

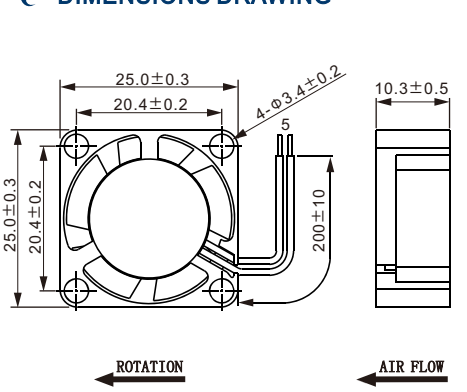

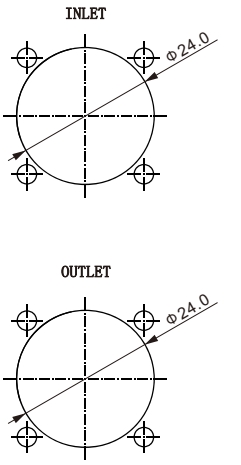

*Specifications are subject to change without notice

BeCool
www.becoolfan.com

3007 Axial Series



Demensions: 30X30X07 mm
Bearing Type: FDB,Hydraulic
Function Type: FG/RD Signal,PWM pulse
Protection: Auto Restart Protection or General Options

SPECIFICATIONS

MODEL NO	VOLTAGE	CURRENT	POWER	SPEED	AIR FLOW		STATIC PRESSURE		NOISE	CURVE
	V	A	W	RPM	CMM	CFM	mmH_2O	INH_2O	(dBA)	
3007RVL-N(P)5	5	0.13	0.65	6000	0.054	1.91	1.68	0.066	22.6	L
3007RVM-N(P)5	5	0.22	1.10	9000	0.085	3.03	3.66	0.144	28.1	M
3007RVH-N(P)5	5	0.35	1.75	12000	0.117	4.15	6.43	0.253	35.4	H
3007RVL-N(P)1	12	0.07	0.84	6000	0.054	1.91	1.68	0.066	22.6	L
3007RVM-N(P)1	12	0.11	1.32	9000	0.085	3.03	3.66	0.144	28.1	M
3007RVH-N(P)1	12	0.17	2.04	12000	0.117	4.15	6.43	0.253	35.4	H

PERFORMANCE CURVES

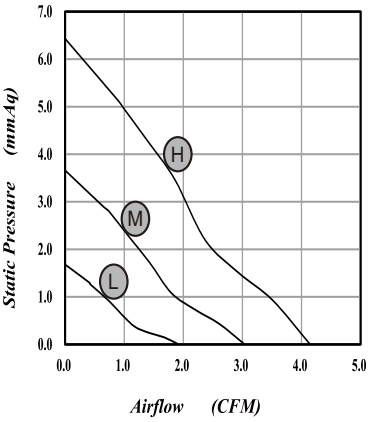

DIMENSIONS DRAWING

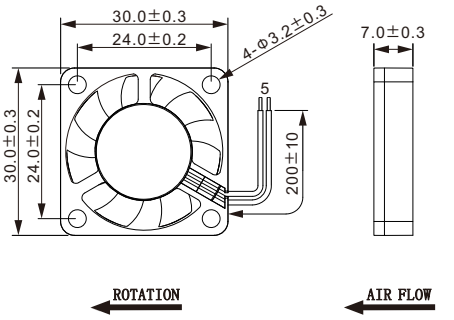

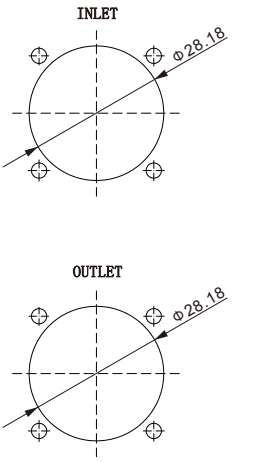

*Specifications are subject to change without notice

www.becoolfan.com

3010 Axial Series



Demensions: 30X30X10 mm

Bearing Type: FDB,Hydraulic,Ball Bearing

Function Type: FG/RD Signal,PWM pulse

Protection: Auto Restart Protection or General Options

SPECIFICATIONS

MODEL NO	VOLTAGE	CURRENT	POWER	SPEED	AIR FLOW		STATIC PRESSURE		NOISE	CURVE
	V	A	W	RPM	CMM	CFM	mmH_2O	INH_2O	(dBA)	
3010B/R05L-N(P/M)	5	0.18	0.90	6000	0.055	2.05	2.02	0.079	23.6	L
3010B/R05M-N(P/M)	5	0.25	1.25	10000	0.090	3.19	4.85	0.191	28.2	M
3010B/R05H-N(P/M)	5	0.32	1.00	15000	0.154	5.45	12.35	0.486	42.0	H
3010B/RVL-N(P/M) 1	12	0.13	1.56	6000	0.055	2.05	2.02	0.079	23.6	L
3010B/RVM-N(P/M) 1	12	0.20	2.40	10000	0.090	3.19	4.85	0.191	28.2	M
3010B/RVH-N(P/M) 1	12	0.32	3.84	15000	0.154	5.45	12.35	0.486	42.0	H

PERFORMANCE CURVES

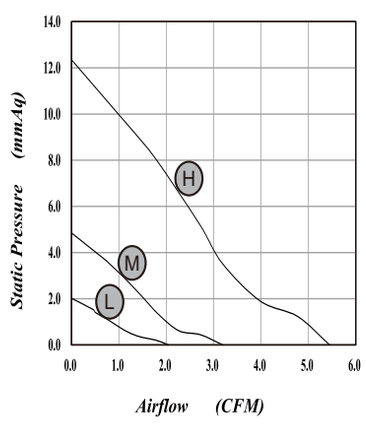

DIMENSIONS DRAWING

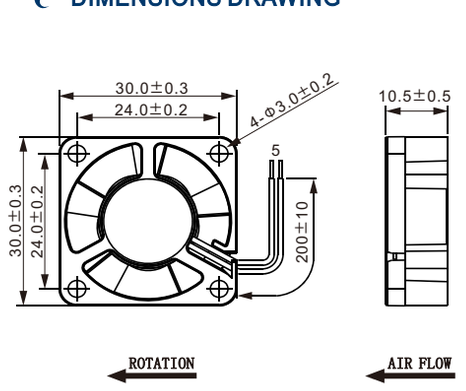

*Specifications are subject to change without notice

BeCool
www.becoolfan.com

3015 Axial Series



Demensions: 30X30X15 mm
Bearing Type: FDB,Hydraulic,Ball Bearing
Function Type: FG/RD Signal,PWM pulse
Protection: Auto Restart Protection or General Options

SPECIFICATIONS

MODEL NO	VOLTAGE	CURRENT	POWER	SPEED	AIR FLOW		STATIC PRESSURE		NOISE	CURVE
	V	A	W	RPM	CMM	CFM	mmH_2O	INH_2O	(dBA)	
3015B/RVL-N(P/M)5	5	0.18	0.90	8000	0.098	3.47	3.74	0.147	30.4	L
3015B/RVM-N(P/M)5	5	0.25	1.25	10000	0.125	4.40	5.78	0.227	35.0	M
3015B/RVH-N(P/M)5	5	0.35	1.72	14000	0.180	6.34	10.51	0.414	40.1	H
3015B/RVL-N(P/M)1	12	0.08	0.96	8000	0.098	3.47	3.74	0.147	30.4	L
3015B/RVM-N(P/M)1	12	0.11	1.32	10000	0.125	4.40	5.78	0.227	35.0	M
3015B/RVH-N(P/M)1	12	0.18	2.16	14000	0.180	6.34	10.51	0.414	40.1	H
3015B/RVL-N(P/M)2	24	0.08	1.92	8000	0.098	3.47	3.74	0.147	30.4	L
3015B/RVM-N(P/M)2	24	0.11	2.64	10000	0.125	4.40	5.78	0.227	35.0	M
3015B/RVH-N(P/M)2	24	0.18	4.32	14000	0.180	6.34	10.51	0.414	40.1	H

PERFORMANCE CURVES

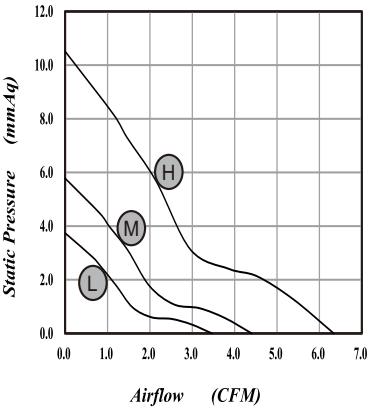

DIMENSIONS DRAWING

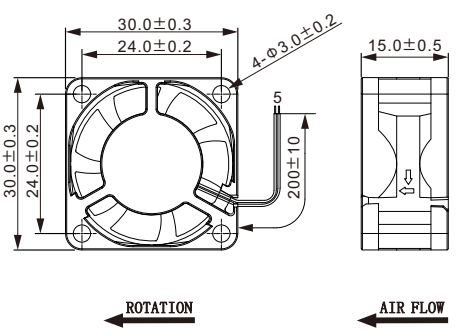

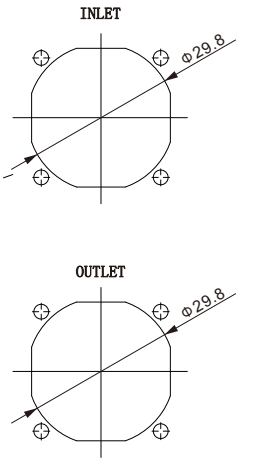

*Specifications are subject to change without notice

BeCool
www.becoolfan.com

3510 Axial Series

Demensions: 35X35X10 mm
Bearing Type: FDB,Hydraulic,Ball Bearing
Function Type: FG/RD Signal,PWM pulse
Protection: Auto Restart Protection or General Options



SPECIFICATIONS

MODEL NO	VOLTAGE	CURRENT	POWER	SPEED	AIR FLOW		STATIC PRESSURE		NOISE	CURVE
	V	A	W	RPM	CMM	CFM	mmH_2O	INH_2O	(dBA)	
3510B/RVL-N(P/M)5	5	0.14	0.70	6500	0.092	3.25	2.19	0.086	26.2	L
3510B/RVM-N(P/M)5	5	0.22	1.10	7500	0.109	3.86	2.96	0.117	29.1	M
3510B/RVH-N(P/M)5	5	0.35	1.75	9500	0.139	4.90	4.74	0.187	35.5	H
3510B/RVL-N(P/M)1	12	0.09	1.08	6500	0.092	3.25	2.19	0.086	26.2	L
3510B/RVM-N(P/M)1	12	0.18	2.16	7500	0.109	3.86	2.96	0.117	29.1	M
3510B/RVH-N(P/M)1	12	0.32	3.84	9500	0.139	4.90	4.74	0.187	35.5	H

PERFORMANCE CURVES

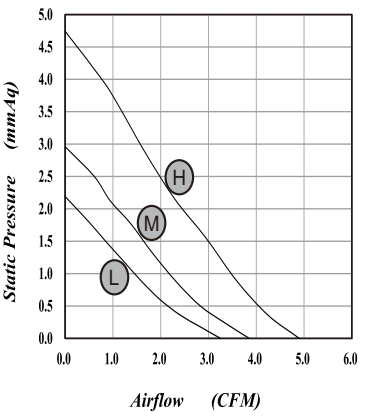

DIMENSIONS DRAWING

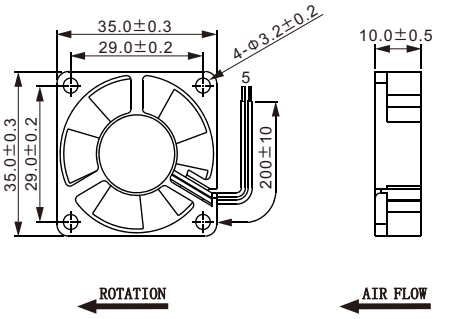

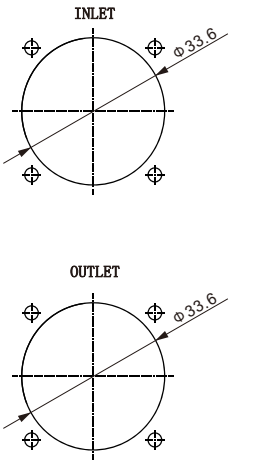

*Specifications are subject to change without notice

BeCool
www.becoolfan.com

4007 Axial Series



Demensions: 40X40X07 mm
Bearing Type: FDB,Hydraulic
Function Type: FG/RD Signal,PWM pulse
Protection: Auto Restart Protection or General Options

SPECIFICATIONS

MODEL NO	VOLTAGE	CURRENT	POWER	SPEED	AIR FLOW		STATIC PRESSURE		NOISE	CURVE
	V	A	W	RPM	CMM	CFM	mmH_2O	INH_2O	(dBA)	
4007RVL-N(P)5	5	0.15	0.75	3000	0.081	2.87	0.54	0.021	23.9	L
4007RVM-N(P)5	5	0.20	1.00	4000	0.113	4.01	0.99	0.039	24.5	M
4007RVH-N(P)5	5	0.30	1.50	5500	0.158	5.60	1.75	0.069	29.8	H
4007RVL-N(P)1	12	0.10	1.20	3000	0.081	2.87	0.54	0.021	23.9	L
4007RVM-N(P)1	12	0.15	1.80	4000	0.113	4.01	0.99	0.039	24.5	M
4007RVH-N(P)1	12	0.25	3.00	5500	0.158	5.60	1.75	0.069	29.8	H

PERFORMANCE CURVES

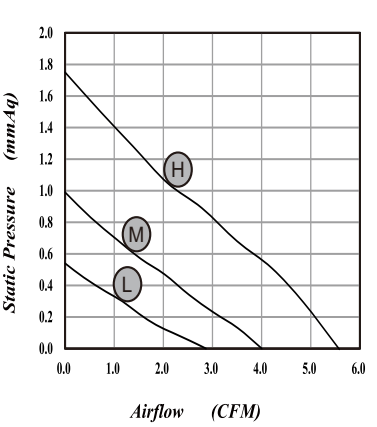

DIMENSIONS DRAWING

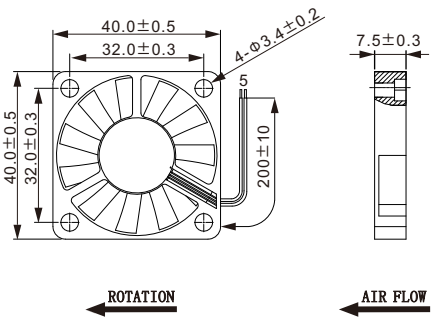

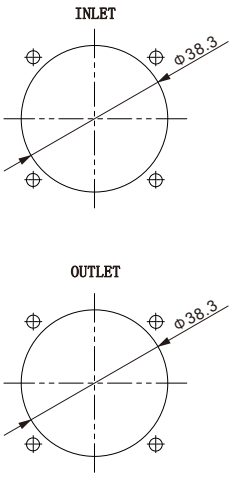

*Specifications are subject to change without notice

BeCool
www.becoolfan.com

4010-1 Axial Series



Demensions: 40X40X10 mm
Bearing Type: FDB,Hydraulic,Ball Bearing
Function Type: FG/RD Signal,PWM pulse
Protection: Auto Restart Protection or General Options

SPECIFICATIONS

MODEL NO	VOLTAGE	CURRENT	POWER	SPEED	AIR FLOW		STATIC PRESSURE		NOISE	CURVE
	V	A	W	RPM	CMM	CFM	mmH_2O	INH_2O	(dBA)	
AD4010B/R05L-N(P/M)	5	0.20	1.00	5000	0.163	5.77	2.40	0.094	25.0	L
AD4010B/R05M-N(P/M)	5	0.35	1.75	8000	0.278	9.80	6.05	0.238	36.9	M
AD4010B/R05H-N(P/M)	5	0.45	2.25	11000	0.388	13.70	11.11	0.437	43.0	H
4010B/RVL-N(P/M)1	12	0.13	1.56	5000	0.163	5.77	2.40	0.094	25.0	L
4010B/RVM-N(P/M)1	12	0.22	2.64	8000	0.278	9.80	6.05	0.238	36.9	M
4010B/RVH-N(P/M)1	12	0.35	4.20	11000	0.388	13.70	11.11	0.437	43.0	H
4010B/RVL-N(P/M)2	24	0.12	2.88	5000	0.163	5.77	2.40	0.094	25.0	L
4010B/RVM-N(P/M)2	24	0.18	4.32	8000	0.278	9.80	6.05	0.238	36.9	M
4010B/RVH-N(P/M)2	24	0.29	6.96	11000	0.388	13.70	11.11	0.437	43.0	H

PERFORMANCE CURVES

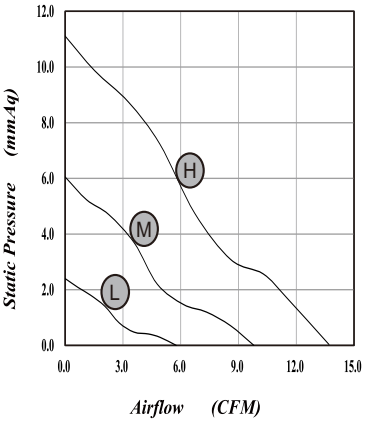

DIMENSIONS DRAWING

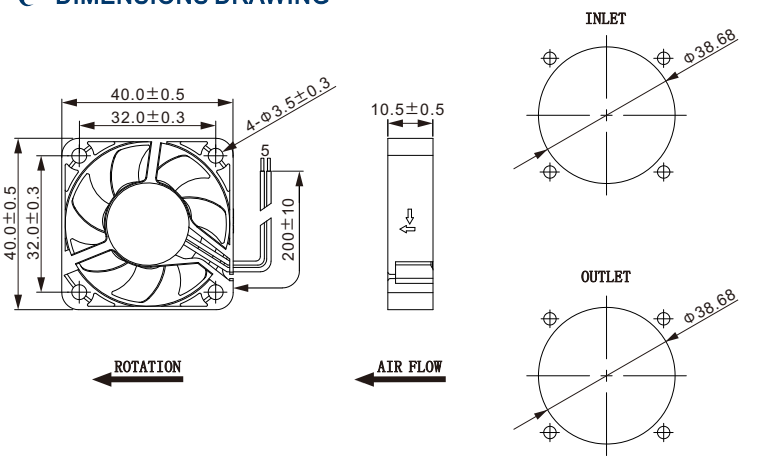

*Specifications are subject to change without notice

BeCool
www.becoolfan.com

4010-2 Axial Series



Demensions: 40X40X10 mm
Bearing Type: FDB,Hydraulic,Ball Bearing
Function Type: FG/RD Signal,PWM pulse
Protection: Auto Restart Protection or General Options

SPECIFICATIONS

MODEL NO	VOLTAGE	CURRENT	POWER	SPEED	AIR FLOW		STATIC PRESSURE		NOISE	CURVE
	V	A	W	RPM	CMM	CFM	mmH_2O	INH_2O	(dBA)	
AD4010B/R05L-N(P/M)	5	0.20	1.00	4000	0.148	5.26	1.79	0.070	25.3	L
AD4010B/R05M-N(P/M)	5	0.35	1.75	6000	0.237	8.40	4.33	0.170	31.8	M
AD4010B/R05H-N(P/M)	5	0.45	2.25	8000	0.318	11.26	8.28	0.326	40.1	H
4010B/RVL-N(P/M)1	12	0.13	1.56	4000	0.148	5.26	1.79	0.070	25.3	L
4010B/RVM-N(P/M)1	12	0.22	2.64	6000	0.237	8.40	4.33	0.170	31.8	M
4010B/RVH-N(P/M)1	12	0.35	4.20	8000	0.318	11.26	8.28	0.326	40.1	H
4010B/RVL-N(P/M)2	24	0.10	2.40	4000	0.148	5.26	1.79	0.070	25.3	L
4010B/RVM-N(P/M)2	24	0.18	4.32	6000	0.237	8.40	4.33	0.170	31.8	M
4010B/RVH-N(P/M)2	24	0.25	6.00	8000	0.318	11.26	8.28	0.326	40.1	H

PERFORMANCE CURVES

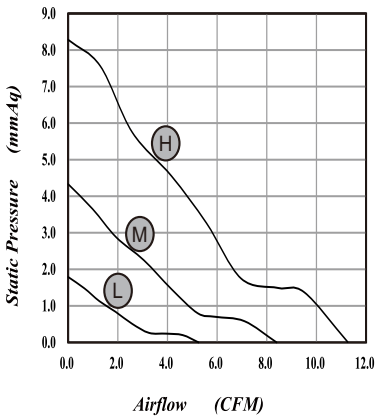

DIMENSIONS DRAWING

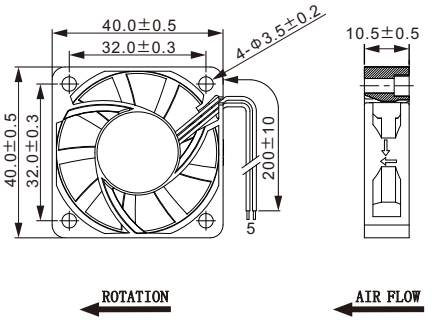

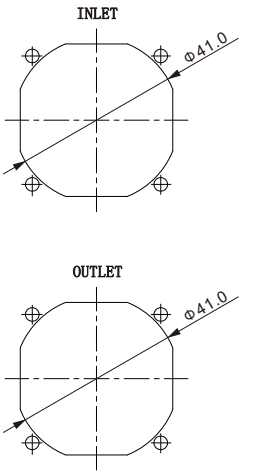

*Specifications are subject to change without notice

BeCool
www.becoolfan.com

4015 Axial Series



Demensions: 40X40X15 mm
Bearing Type: FDB,Hydraulic,Ball Bearing
Function Type: FG/RD Signal,PWM pulse
Protection: Auto Restart Protection or General Options

SPECIFICATIONS

MODEL NO	VOLTAGE	CURRENT	POWER	SPEED	AIR FLOW		STATIC PRESSURE		NOISE	CURVE
	V	A	W	RPM	CMM	CFM	mmH_2O	INH_2O	(dBA)	
4015B/RVL-N(P/M)5	5	0.32	1.60	6500	0.216	7.61	5.08	0.200	30.8	L
4015B/RVM-N(P/M)5	5	0.45	2.25	8500	0.287	10.12	8.67	0.341	36.5	M
4015B/RVH-N(P/M)5	5	0.55	2.75	11000	0.373	13.18	14.20	0.559	42.5	H
4015B/RVL-N(P/M)1	12	0.16	1.92	6500	0.216	7.61	5.08	0.200	30.8	L
4015B/RVM-N(P/M)1	12	0.22	2.64	8500	0.287	10.12	8.67	0.341	36.5	M
4015B/RVH-N(P/M)1	12	0.30	3.60	11000	0.373	13.18	14.20	0.559	42.5	H
4015B/RVL-N(P)2	24	0.08	1.92	6500	0.216	7.61	5.08	0.200	30.8	L
4015B/RVM-N(P)2	24	0.11	2.64	8500	0.287	10.12	8.67	0.341	36.5	M
4015B/RVH-N(P)2	24	0.22	5.28	11000	0.373	13.18	14.20	0.559	42.5	H

PERFORMANCE CURVES

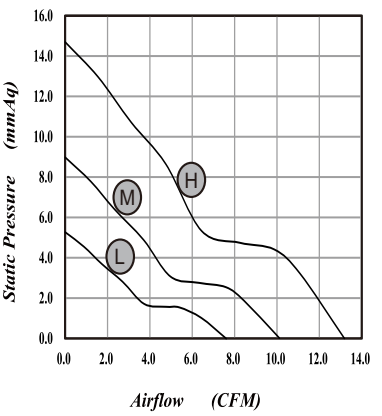

DIMENSIONS DRAWING

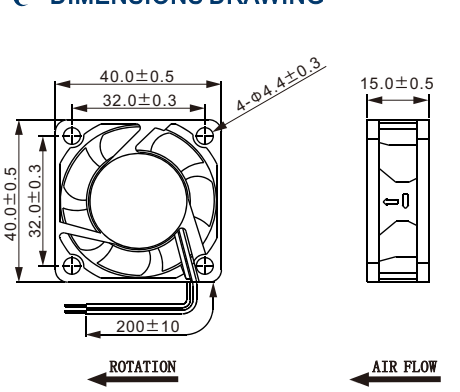

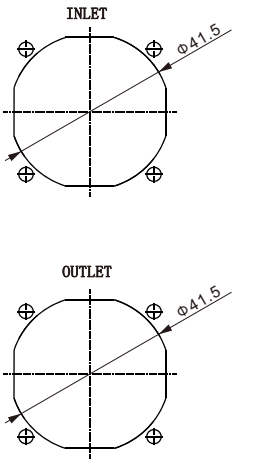

*Specifications are subject to change without notice

BeCool
www.becoolfan.com

4020-1 Axial Series

Demensions: 40X40X20 mm
Bearing Type: FDB,Hydraulic,Ball Bearing
Function Type: FG/RD Signal,PWM pulse
Protection: Auto Restart Protection or General Options



SPECIFICATIONS

MODEL NO	VOLTAGE	CURRENT	POWER	SPEED	AIR FLOW		STATIC PRESSURE		NOISE	CURVE
	V	A	W	RPM	CMM	CFM	mmH_2O	INH_2O	(dBA)	
402HB/RVL-N(P/M)5	5	0.25	1.25	5000	0.154	5.43	3.16	0.124	21.7	L
402HB/RVM-N(P/M)5	5	0.35	1.75	8000	0.227	8.02	8.68	0.342	37.4	M
402HB/RVH-N(P/M)5	5	0.45	2.25	10000	0.286	10.08	12.68	0.499	41.6	H
402HB/RVL-N(P/M)1	12	0.16	1.92	5000	0.154	5.43	3.16	0.124	21.7	L
402HB/RVM-N(P/M)1	12	0.25	3.00	8000	0.227	8.02	8.68	0.342	37.4	M
402HB/RVH-N(P/M)1	12	0.35	4.20	10000	0.286	10.08	12.68	0.499	41.6	H
402HB/RVL-N(P/M)2	24	0.10	2.40	5000	0.154	5.43	3.16	0.124	21.7	L
402HB/RVM-N(P/M)2	24	0.20	4.80	8000	0.227	8.02	8.68	0.342	37.4	M
402HB/RVH-N(P/M)2	24	0.30	7.20	10000	0.286	10.08	12.68	0.499	41.6	H

PERFORMANCE CURVES

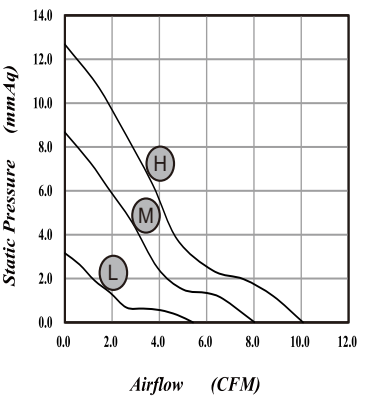

DIMENSIONS DRAWING

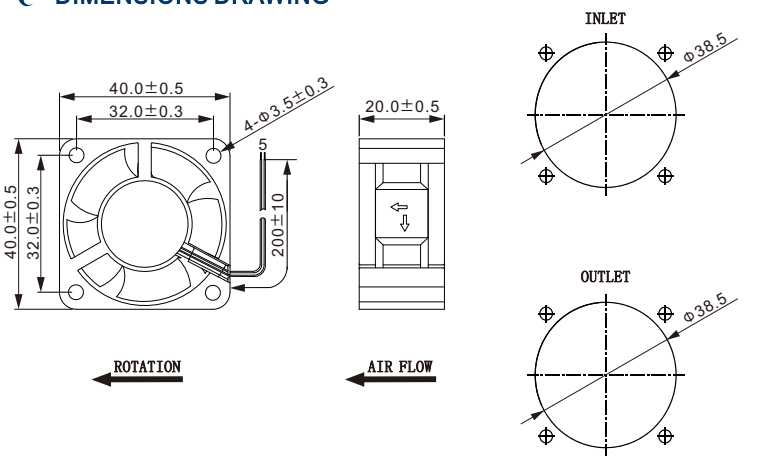

*Specifications are subject to change without notice

www.becoolfan.com

4020-2 Axial Series

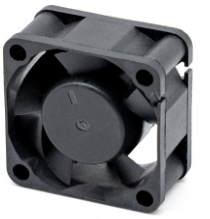

Demensions: 40X40X20 mm

Bearing Type: Ball Bearing

Function Type: FG/RD Signal,PWM pulse

Protection: Auto Restart Protection or General Options

SPECIFICATIONS

MODEL NO	VOLTAGE	CURRENT	POWER	SPEED	AIR FLOW		STATIC PRESSURE		NOISE	CURVE
	V	A	W	RPM	CMM	CFM	mmH_2O	INH_2O	(dBA)	
402HBVL-N(P/M)5	5	0.25	1.25	5000	0.151	5.32	3.09	0.122	26.0	L
402HBVM-N(P/M)5	5	0.35	1.75	8000	0.248	8.75	8.51	0.335	35.2	M
402HBVH-N(P/M)5	5	0.45	2.25	12000	0.381	13.45	18.27	0.719	46.0	H
402HBVL-N(P/M)1	12	0.16	1.92	5000	0.151	5.32	3.09	0.122	26.0	L
402HBVM-N(P/M)1	12	0.25	3.00	8000	0.248	8.75	8.51	0.335	35.2	M
402HBVH-N(P/M)1	12	0.35	4.20	12000	0.381	13.45	18.27	0.719	46.0	H
402HBVL-N(P/M)2	24	0.10	2.40	5000	0.151	5.32	3.09	0.122	26.0	L
402HBVM-N(P/M)2	24	0.20	4.80	8000	0.248	8.75	8.51	0.335	35.2	M
402HBVH-N(P/M)2	24	0.30	7.20	12000	0.381	13.45	18.27	0.719	46.0	H

PERFORMANCE CURVES

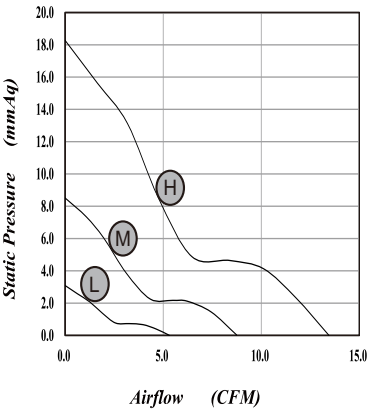

DIMENSIONS DRAWING

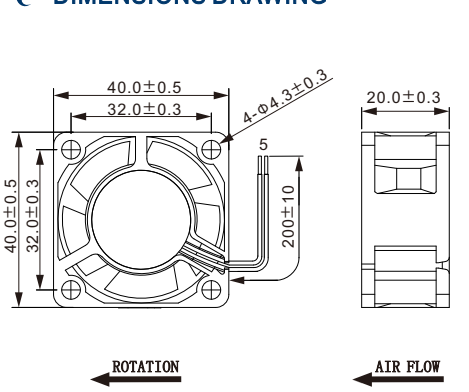

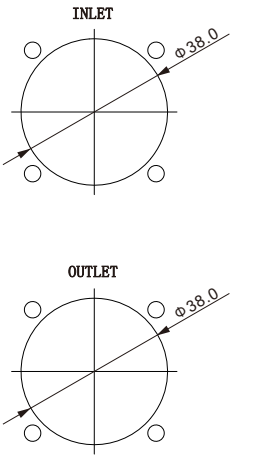

*Specifications are subject to change without notice

BeCool
www.becoolfan.com

4020-3 Axial Series



Demensions: 40X40X20 mm
Bearing Type: Ball Bearing
Function Type: FG/RD Signal,PWM pulse
Protection: Auto Restart Protection or General Options

SPECIFICATIONS

MODEL NO	VOLTAGE	CURRENT	POWER	SPEED	AIR FLOW		STATIC PRESSURE		NOISE	CURVE
	V	A	W	RPM	CMM	CFM	mmH2O	INH2O	(dBA)	
402HBVL-N(P/M)1	12	0.16	1.92	7000	0.229	8.12	6.49	0.256	31.5	L
402HBVM-N(P/M)1	12	0.25	3.00	10000	0.336	11.90	12.83	0.505	43.4	M
402HBVH-N(P/M)1	12	0.35	4.20	12500	0.414	14.66	19.59	0.771	48.6	H
402HBVU-N(P/M)1	12	0.50	6.00	16000	0.527	18.59	33.81	1.331	53.0	U
402HBVL-N(P/M)2	24	0.10	2.40	7000	0.229	8.12	6.49	0.256	31.5	L
402HBVM-N(P/M)2	24	0.20	4.80	10000	0.336	11.90	12.83	0.505	43.4	M
402HBVH-N(P/M)2	24	0.30	7.20	12500	0.414	14.66	19.59	0.771	48.6	H
402HBVU-N(P/M)2	24	0.40	9.60	16000	0.527	18.59	33.81	1.331	53.0	U

PERFORMANCE CURVES

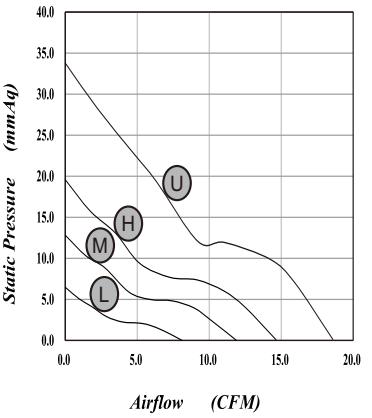

DIMENSIONS DRAWING

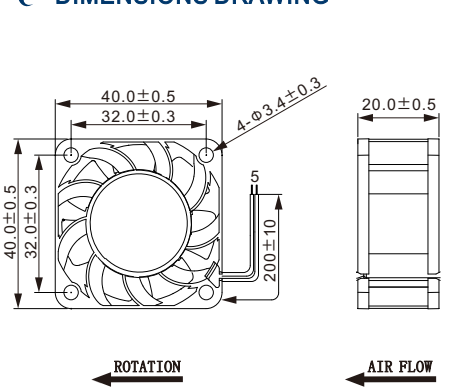

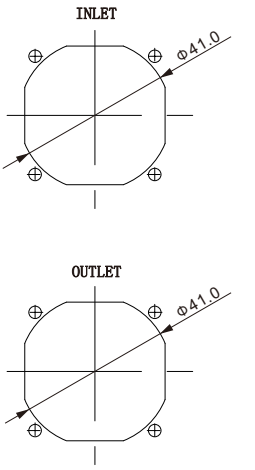

*Specifications are subject to change without notice

BeCool
www.becoolfan.com

4028-1 Axial Series

Demensions: 40X40X28 mm
Bearing Type: Ball Bearing
Function Type: FG/RD Signal,PWM pulse
Protection: Auto Restart Protection or General Options



SPECIFICATIONS

MODEL NO	VOLTAGE	CURRENT	POWER	SPEED	AIR FLOW		STATIC PRESSURE		NOISE	CURVE
	V	A	W	RPM	CMM	CFM	mmH_2O	INH_2O	(dBA)	
4028BVL-N(P/M)1	12	0.35	4.20	5500	0.239	8.43	4.77	0.188	31.1	L
4028BVM-N(P/M)1	12	0.50	6.00	10000	0.463	16.33	17.47	0.690	47.5	M
4028BVH-N(P/M)1	12	0.66	7.92	15000	0.715	25.25	41.20	1.622	60.2	H
4028BVL-N(P/M)2	24	0.20	4.80	5500	0.239	8.43	4.77	0.188	31.1	L
4028BVM-N(P/M)2	24	0.30	7.20	10000	0.463	16.33	17.47	0.690	47.5	M
4028BVH-N(P/M)2	24	0.45	10.80	15000	0.715	25.25	41.20	1.622	60.2	H

PERFORMANCE CURVES

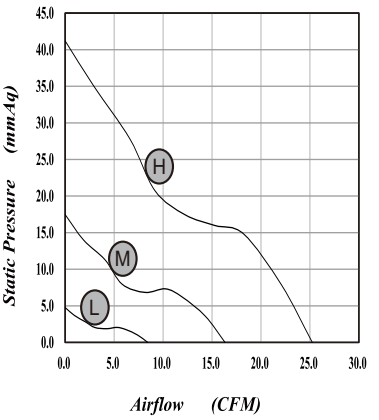

DIMENSIONS DRAWING

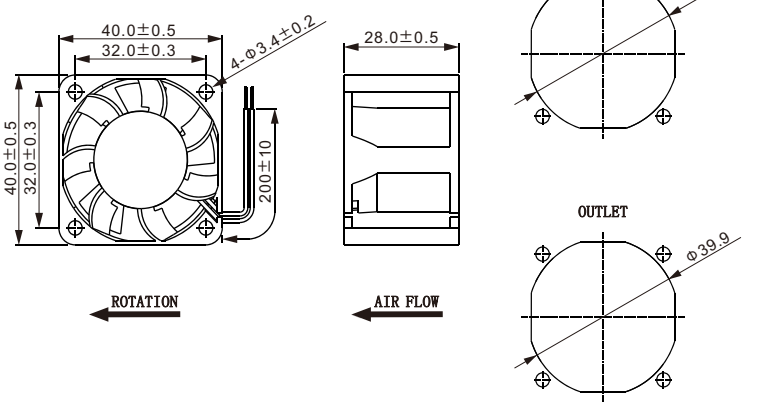

*Specifications are subject to change without notice

www.becoolfan.com

4028-2 Axial Series



Demensions: 40X40X28 mm

Bearing Type: Ball Bearing

Function Type: FG/RD Signal,PWM pulse

Protection: Auto Restart Protection or General Options

SPECIFICATIONS

MODEL NO	VOLTAGE	CURRENT	POWER	SPEED	AIR FLOW		STATIC PRESSURE		NOISE	CURVE
	V	A	W	RPM	CMM	CFM	mmH_2O	INH_2O	(dBA)	
4028BVL-N(P/M)1	12	0.35	4.20	8000	0.274	9.67	10.22	0.402	36.9	L
4028BVM-N(P/M)1	12	0.50	6.00	13000	0.462	16.32	24.79	0.976	47.0	M
4028BVH-N(P/M)1	12	0.66	7.92	18000	0.644	22.74	44.26	1.742	55.0	H
4028BVU-N(P/M)1	12	1.30	15.60	23000	0.803	28.35	74.10	2.917	62.4	U
4028BVL-N(P/M)2	24	0.20	4.80	8000	0.274	9.67	10.22	0.402	36.9	L
4028BVM-N(P/M)2	24	0.30	7.20	13000	0.462	16.32	24.79	0.976	47.0	M
4028BVH-N(P/M)2	24	0.45	10.80	18000	0.644	22.74	44.26	1.742	55.0	H
4028BVU-N(P/M)2	24	0.60	14.40	23000	0.803	28.35	74.10	2.917	62.4	U

PERFORMANCE CURVES

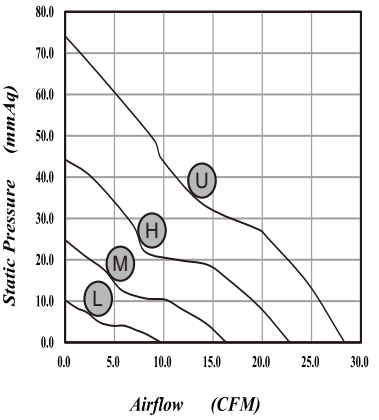

DIMENSIONS DRAWING

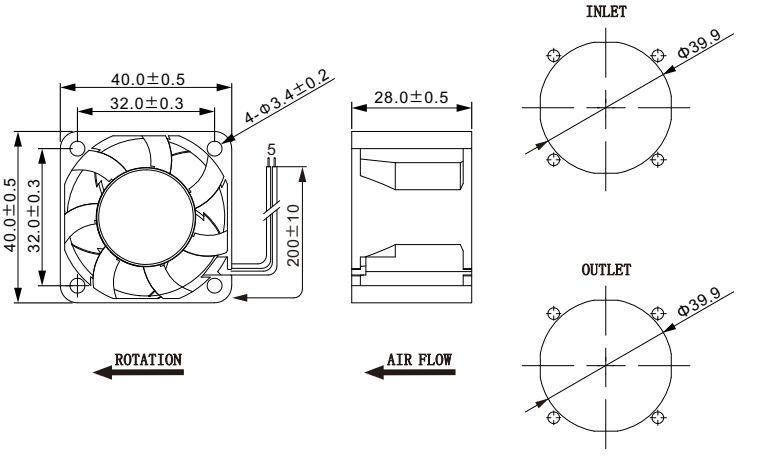

*Specifications are subject to change without notice

BeCool
www.becoolfan.com

4028-3 Axial Series



Demensions: 40X40X28 mm
Bearing Type: Ball Bearing
Function Type: FG/RD Signal,PWM pulse
Protection: Auto Restart Protection or General Options

SPECIFICATIONS

MODEL NO	VOLTAGE	CURRENT	POWER	SPEED	AIR FLOW		STATIC PRESSURE		NOISE	CURVE
	V	A	W	RPM	CMM	CFM	mmH_2O	INH_2O	(dBA)	
4028BVU-N(P/M)1	12	1.30	15.60	16000	0.559	19.74	43.16	1.699	56.1	U
4028BVE-N(P/M)1	12	1.80	21.60	25000	0.875	30.90	96.90	3.815	64.1	E
4028BVF-N(P/M)1	12	3.50	42.00	30000	1.068	37.72	169.10	6.657	67.0	F
4028BVU-N(P/M)2	24	0.60	14.40	16000	0.559	19.74	43.16	1.699	56.1	U
4028BVE-N(P/M)2	24	1.00	24.00	25000	0.875	30.90	96.90	3.815	64.1	E
4028BVF-N(P/M)2	24	1.50	36.00	30000	1.068	37.72	169.10	6.657	67.0	F

PERFORMANCE CURVES

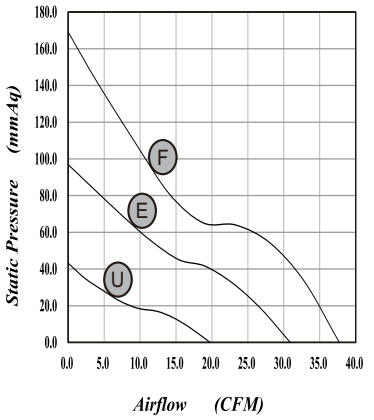

DIMENSIONS DRAWING

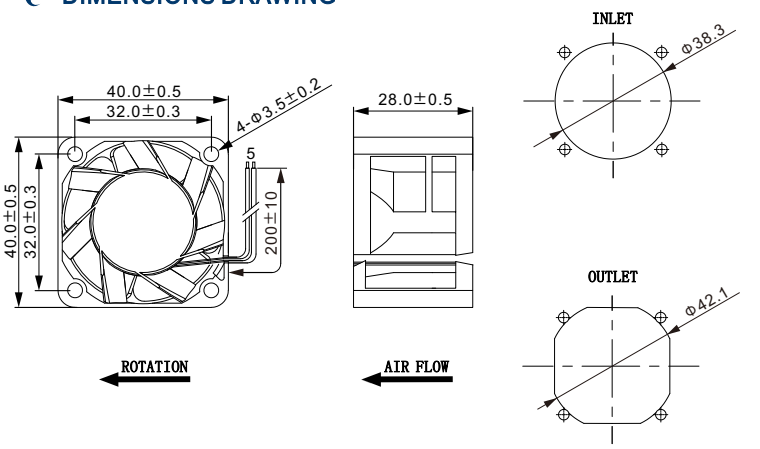

*Specifications are subject to change without notice

BeCool
www.becoolfan.com

4056 Axial Series



Demensions: 40X40X56 mm
Bearing Type: Ball Bearing
Function Type: FG/RD Signal,PWM pulse
Protection: Auto Restart Protection or General Options

SPECIFICATIONS

MODEL NO	VOLTAGE	CURRENT	POWER	SPEED	AIR FLOW		STATIC PRESSURE		NOISE	CURVE
	V	A	W	RPM	CMM	CFM	mmH_2O	INH_2O	(dBA)	
4056BVH-N(P/M)1	12	1.40	16.80	19000/16000	0.602	21.27	77.130	3.035	65.0	H
4056BVU-N(P/M)1	12	2.00	24.00	23000/19000	1.039	26.41	100.50	3.956	69.6	U
4056BVE-N(P/M)1	12	4.00	48.00	30000/26700	1.006	35.50	198.30	7.807	74.9	E

PERFORMANCE CURVES

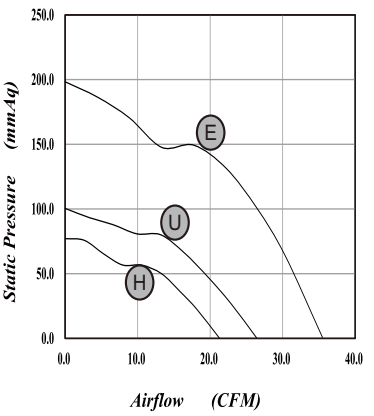

DIMENSIONS DRAWING

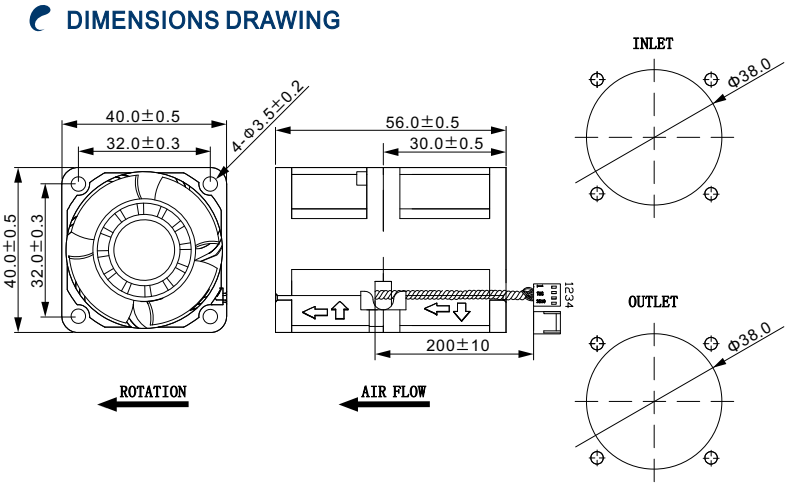

*Specifications are subject to change without notice

www.becoolfan.com

4510 Axial Series



Demensions: 45X45X10 mm

Bearing Type: FDB,Hydraulic,Ball Bearing

Function Type: FG/RD Signal,PWM pulse

Protection: Auto Restart Protection or General Options

SPECIFICATIONS

MODEL NO	VOLTAGE	CURRENT	POWER	SPEED	AIR FLOW		STATIC PRESSURE		NOISE	CURVE
	V	A	W	RPM	CMM	CFM	mmH_2O	INH_2O	(dBA)	
4510B/RVL-N(P/M)5	5	0.20	1.00	3000	0.033	1.18	1.87	0.074	18.5	L
4510B/RVM-N(P/M)5	5	0.30	1.50	4000	0.047	1.67	3.72	0.146	23.7	M
4510B/RVH-N(P/M)5	5	0.40	2.00	5400	0.063	2.24	6.76	0.266	29.3	H
4510B/RVL-N(P/M)1	12	0.15	1.80	3000	0.033	1.18	1.87	0.074	18.5	L
4510B/RVM-N(P/M)1	12	0.25	3.00	4000	0.047	1.67	3.72	0.146	23.7	M
4510B/RVH-N(P/M)1	12	0.35	4.20	5400	0.063	2.24	6.76	0.266	29.3	H

PERFORMANCE CURVES

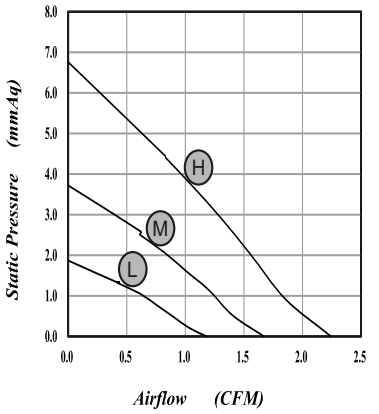

DIMENSIONS DRAWING

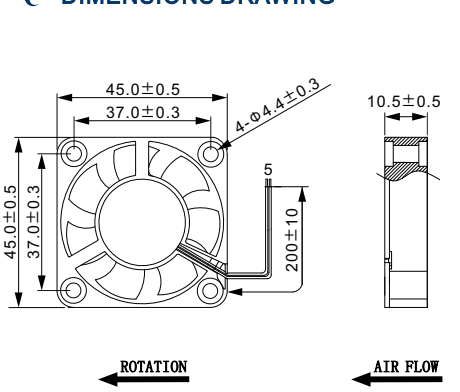

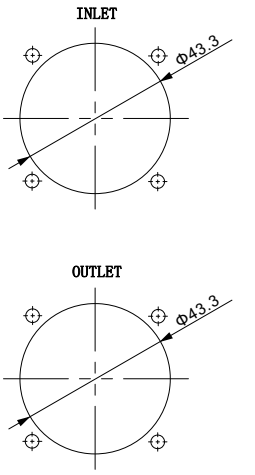

*Specifications are subject to change without notice

BeCool
www.becoolfan.com

5010 Axial Series



Demensions: 50X50X10 mm
Bearing Type: FDB,Hydraulic,Ball Bearing
Function Type: FG/RD Signal,PWM pulse
Protection: Auto Restart Protection or General Options

SPECIFICATIONS

MODEL NO	VOLTAGE	CURRENT	POWER	SPEED	AIR FLOW		STATIC PRESSURE		NOISE	CURVE
	V	A	W	RPM	CMM	CFM	mmH_2O	INH_2O	(dBA)	
5010B/RVL-N(P/M)5	5	0.25	1.25	3400	0.133	4.69	1.07	0.042	23.5	L
5010B/RVM-N(P/M)5	5	0.35	1.75	5000	0.231	8.17	2.94	0.116	31.5	M
5010B/RVH-N(P/M)5	5	0.45	2.25	7000	0.321	11.33	4.76	0.187	39.8	H
5010B/RVL-N(P/M)1	12	0.16	1.92	3400	0.133	4.69	1.07	0.042	23.5	L
5010B/RVM-N(P/M)1	12	0.25	3.00	5000	0.231	8.17	2.94	0.116	31.5	M
5010B/RVH-N(P/M)1	12	0.35	4.20	7000	0.321	11.33	4.76	0.187	39.8	H
5010B/RVL-N(P/M)2	24	0.10	2.40	3400	0.133	4.69	1.07	0.042	23.5	L
5010B/RVM-N(P/M)2	24	0.20	4.80	5000	0.231	8.17	2.94	0.116	31.5	M
5010B/RVH-N(P/M)2	24	0.30	7.20	7000	0.321	11.33	4.76	0.187	39.8	H

PERFORMANCE CURVES

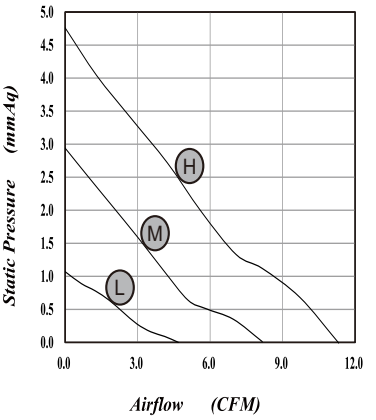

DIMENSIONS DRAWING

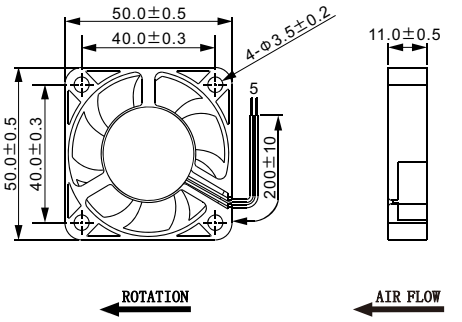

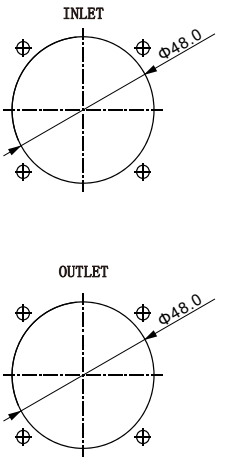

*Specifications are subject to change without notice

www.becoolfan.com

5015 Axial Series

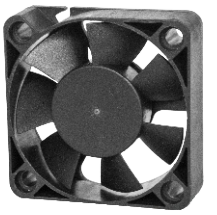

Demensions: 50X50X15 mm

Bearing Type: FDB,Hydraulic,Ball Bearing

Function Type: FG/RD Signal,PWM pulse

Protection: Auto Restart Protection or General Options

SPECIFICATIONS

MODEL NO	VOLTAGE	CURRENT	POWER	SPEED	AIR FLOW		STATIC PRESSURE		NOISE	CURVE
	V	A	W	RPM	CMM	CFM	mmH_2O	INH_2O	(dBA)	
5015B/RVL-N(P/M)5	5	0.25	1.25	3200	0.195	6.89	1.61	0.063	23.2	L
5015B/RVM-N(P/M)5	5	0.45	2.25	4800	0.299	10.57	3.68	0.145	33.0	M
5015B/RVH-N(P/M)5	5	0.60	3.00	7200	0.454	16.02	7.19	0.283	43.4	H
5015B/RVL-N(P/M)1	12	0.22	2.64	3200	0.195	6.89	1.61	0.063	23.2	L
5015B/RVM-N(P/M)1	12	0.32	3.84	4800	0.299	10.57	3.68	0.145	33.0	M
5015B/RVH-N(P/M)1	12	0.48	5.76	7200	0.454	16.02	7.19	0.283	43.4	H
5015B/RVL-N(P)2	24	0.12	2.88	3200	0.195	6.89	1.61	0.063	23.2	L
5015B/RVM-N(P)2	24	0.18	4.32	4800	0.299	10.57	3.68	0.145	33.0	M
5015B/RVH-N(P)2	24	0.27	6.48	7200	0.454	16.02	7.19	0.283	43.4	H

PERFORMANCE CURVES

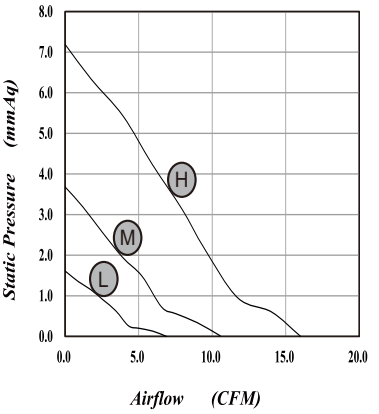

DIMENSIONS DRAWING

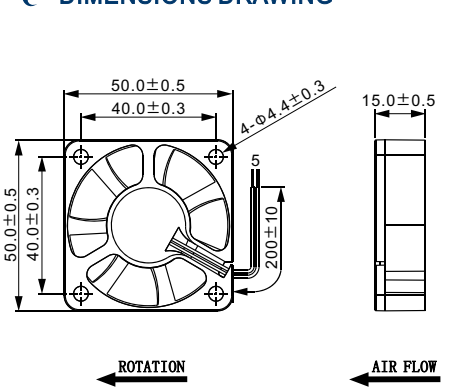

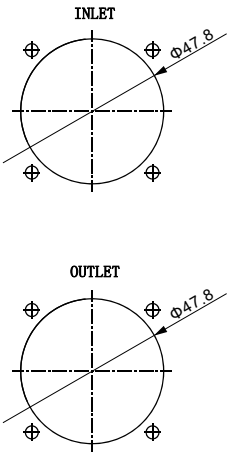

*Specifications are subject to change without notice

www.becoolfan.com

5020 Axial Series



Demensions: 50X50X20 mm

Bearing Type: FDB,Hydraulic,Ball Bearing

Function Type: FG/RD Signal,PWM pulse

Protection: Auto Restart Protection or General Options

SPECIFICATIONS

MODEL NO	VOLTAGE	CURRENT	POWER	SPEED	AIR FLOW		STATIC PRESSURE		NOISE	CURVE
	V	A	W	RPM	CMM	CFM	mmH_2O	INH_2O	(dBA)	
5020B/RVL-N(P/M)1	12	0.12	1.44	4000	0.301	10.63	2.48	0.098	23.5	L
5020B/RVM-N(P/M)1	12	0.26	3.12	6000	0.466	16.47	5.77	0.227	36.1	M
5020B/RVH-N(P/M)1	12	0.68	8.16	8500	0.680	24.01	10.26	0.404	48.2	H
5020B/RVL-N(P/M)2	24	0.15	3.60	4000	0.301	10.63	2.48	0.098	23.5	L
5020B/RVM-N(P/M)2	24	0.20	4.80	6000	0.466	16.47	5.77	0.227	36.1	M
5020B/RVH-N(P/M)2	24	0.35	8.40	8500	0.680	24.01	10.26	0.404	48.2	H

PERFORMANCE CURVES

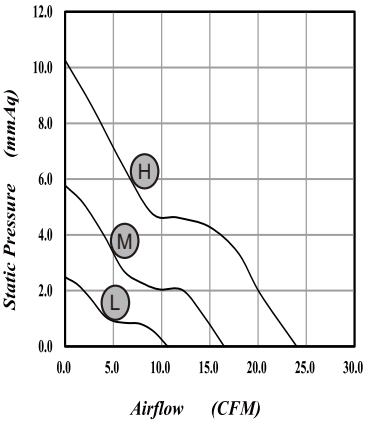

DIMENSIONS DRAWING

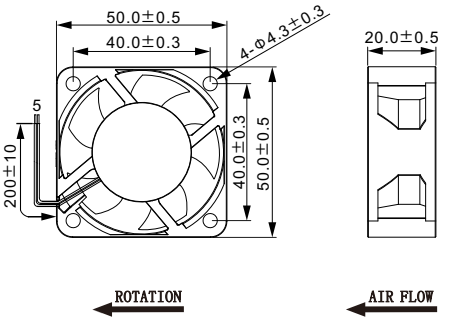

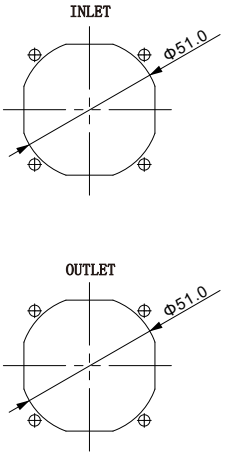

*Specifications are subject to change without notice

BeCool
www.becoolfan.com

6010 Axial Series



Demensions: 60X60X10 mm
Bearing Type: FDB,Hydraulic,Ball Bearing
Function Type: FG/RD Signal,PWM pulse
Protection: Auto Restart Protection or General Options

SPECIFICATIONS

MODEL NO	VOLTAGE	CURRENT	POWER	SPEED	AIR FLOW		STATIC PRESSURE		NOISE	CURVE
	V	A	W	RPM	CMM	CFM	mmH_2O	INH_2O	(dBA)	
6010B/RVL-N(P/M)5	5	0.20	1.00	3000	0.305	10.77	1.33	0.052	30.3	L
6010B/RVM-N(P/M)5	5	0.38	1.90	4200	0.446	15.74	2.79	0.110	34.5	M
6010B/RVH-N(P/M)5	5	0.55	2.75	5400	0.586	20.70	4.64	0.183	39.5	H
6010B/RVL-N(P/M)1	12	0.11	1.32	3000	0.305	10.77	1.33	0.052	30.3	L
6010B/RVM-N(P/M)1	12	0.20	2.40	4200	0.446	15.74	2.79	0.110	34.5	M
6010B/RVH-N(P/M)1	12	0.45	5.40	5400	0.586	20.70	4.64	0.183	39.5	H
6010B/RVL-N(P/M)2	24	0.08	1.92	3000	0.357	12.62	1.72	0.068	30.3	L
6010B/RVM-N(P/M)2	24	0.13	3.12	4200	0.409	14.46	2.50	0.099	34.5	M
6010B/RVH-N(P/M)2	24	0.28	6.72	5400	0.489	17.28	3.46	0.136	39.5	H

PERFORMANCE CURVES

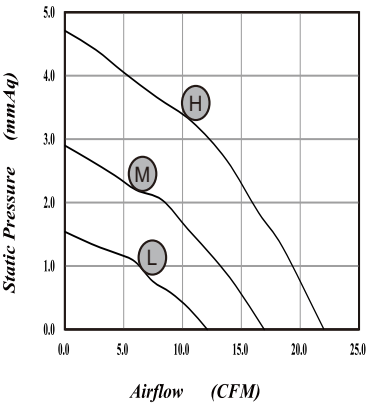

DIMENSIONS DRAWING

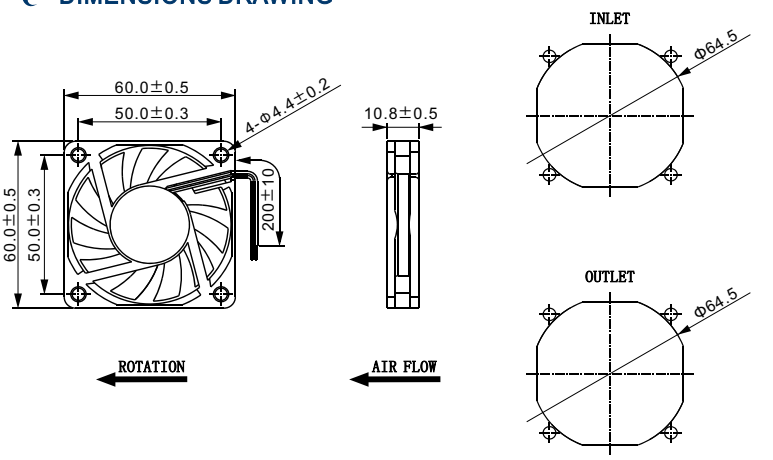

*Specifications are subject to change without notice

BeCool
www.becoolfan.com

6015 Axial Series



Demensions: 60X60X15 mm
Bearing Type: FDB,Hydraulic,Ball Bearing
Function Type: FG/RD Signal,PWM pulse
Protection: Auto Restart Protection or General Options

SPECIFICATIONS

MODEL NO	VOLTAGE	CURRENT	POWER	SPEED	AIR FLOW		STATIC PRESSURE		NOISE	CURVE
	V	A	W	RPM	CMM	CFM	mmH_2O	INH_2O	(dBA)	
6015B/RVL-N(P/M)5	5	0.25	1.25	2000	0.217	7.68	0.94	0.037	14.1	L
6015B/RVM-N(P/M)5	5	0.35	1.75	4000	0.437	15.44	3.32	0.131	32.1	M
6015B/RVH-N(P/M)5	5	0.50	2.50	6000	0.667	23.57	6.34	0.250	41.7	H
6015B/RVL-N(P/M)1	12	0.22	2.64	2000	0.217	7.68	0.94	0.037	14.1	L
6015B/RVM-N(P/M)1	12	0.33	3.96	4000	0.437	15.44	3.32	0.131	32.1	M
6015B/RVH-N(P/M)1	12	0.45	5.40	6000	0.667	23.57	6.34	0.250	41.7	H
6015B/RVL-N(P/M)2	24	0.10	2.40	2000	0.217	7.68	0.94	0.037	14.1	L
6015B/RVM-N(P/M)2	24	0.18	4.32	4000	0.437	15.44	3.32	0.131	32.1	M
6015B/RVH-N(P/M)2	24	0.28	6.72	6000	0.667	23.57	6.34	0.250	41.7	H

PERFORMANCE CURVES

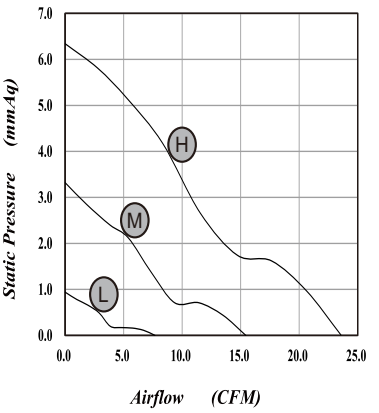

DIMENSIONS DRAWING

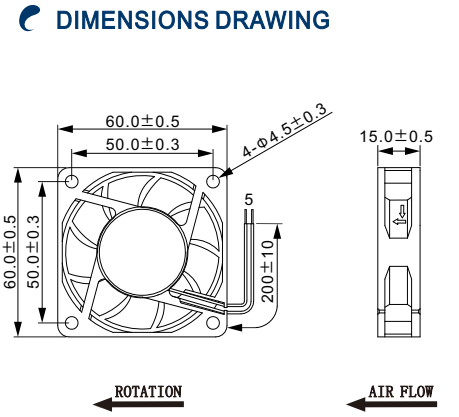

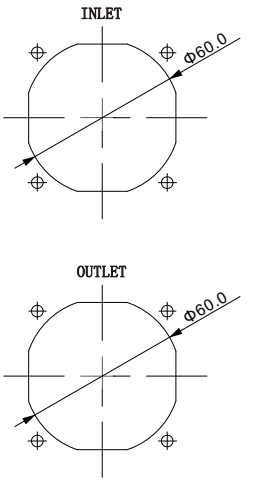

*Specifications are subject to change without notice

www.becoolfan.com

6020 Axial Series



Demensions: 60X60X20 mm

Bearing Type: FDB,Hydraulic,Ball Bearing

Function Type: FG/RD Signal,PWM pulse

Protection: Auto Restart Protection or General Options

SPECIFICATIONS

MODEL NO	VOLTAGE	CURRENT	POWER	SPEED	AIR FLOW		STATIC PRESSURE		NOISE	CURVE
	V	A	W	RPM	CMM	CFM	mmH_2O	INH_2O	(dBA)	
6020B/RVL-N(P/M)1	12	0.17	2.04	3000	0.414	14.63	2.43	0.096	26.9	L
6020B/RVM-N(P/M)1	12	0.32	3.84	5000	0.691	24.38	6.72	0.265	40.3	M
6020B/RVH-N(P/M)1	12	0.55	6.60	7000	0.942	33.27	13.90	0.547	51.2	H
6020B/RVL-N(P/M)2	24	0.10	2.40	3000	0.414	14.63	2.43	0.096	26.9	L
6020B/RVM-N(P/M)2	24	0.15	3.60	5000	0.691	24.38	6.72	0.265	40.3	M
6020B/RVH-N(P/M)2	24	0.20	4.80	7000	0.942	33.27	13.90	0.547	51.2	H

PERFORMANCE CURVES

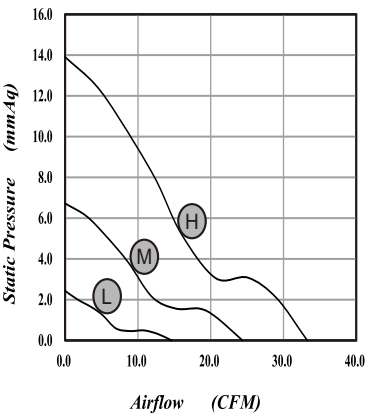

DIMENSIONS DRAWING

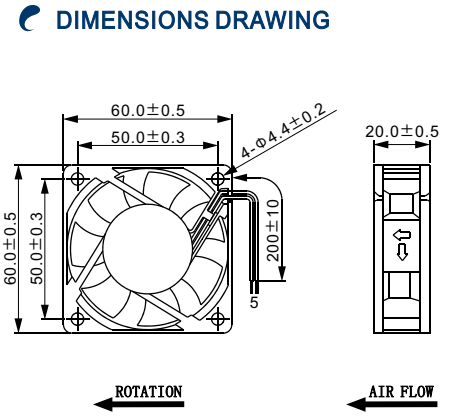

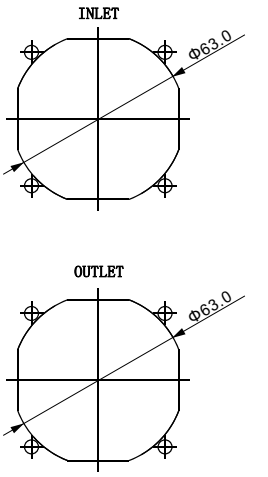

*Specifications are subject to change without notice

www.becoolfan.com

6025-1 Axial Series

Demensions: 60X60X25 mm

Bearing Type: FDB,Hydraulic,Ball Bearing

Function Type: FG/RD Signal,PWM pulse

Protection: Auto Restart Protection or General Options



SPECIFICATIONS

MODEL NO	VOLTAGE	CURRENT	POWER	SPEED	AIR FLOW		STATIC PRESSURE		NOISE	CURVE
	V	A	W	RPM	CMM	CFM	mmH_2O	INH_2O	(dBA)	
6025B/RVL-N(P/M)1	12	0.22	2.64	3400	0.447	15.77	3.11	0.122	26.7	L
6025B/RVM-N(P/M)1	12	0.35	4.20	5000	0.692	24.43	6.85	0.270	36.0	M
6025B/RVH-N(P/M)1	12	0.55	6.60	7300	1.013	35.79	13.48	0.530	46.6	H
6025B/RVL-N(P/M)2	24	0.20	4.80	3400	0.447	15.77	3.11	0.122	26.7	L
6025B/RVM-N(P/M)2	24	0.30	7.20	5000	0.692	24.43	6.85	0.270	36.0	M
6025B/RVH-N(P/M)2	24	0.50	12.00	7300	1.013	35.79	13.48	0.530	46.6	H
6025B/RVL-N(P/M)4	48	0.08	3.84	3400	0.447	15.77	3.11	0.122	26.7	L
6025B/RVM-N(P/M)4	48	0.15	7.20	5000	0.692	24.43	6.85	0.270	36.0	M
6025B/RVH-N(P/M)4	48	0.38	18.24	7300	1.013	35.79	13.48	0.530	46.6	H

PERFORMANCE CURVES

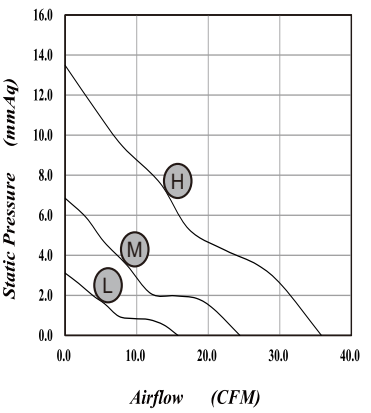

DIMENSIONS DRAWING

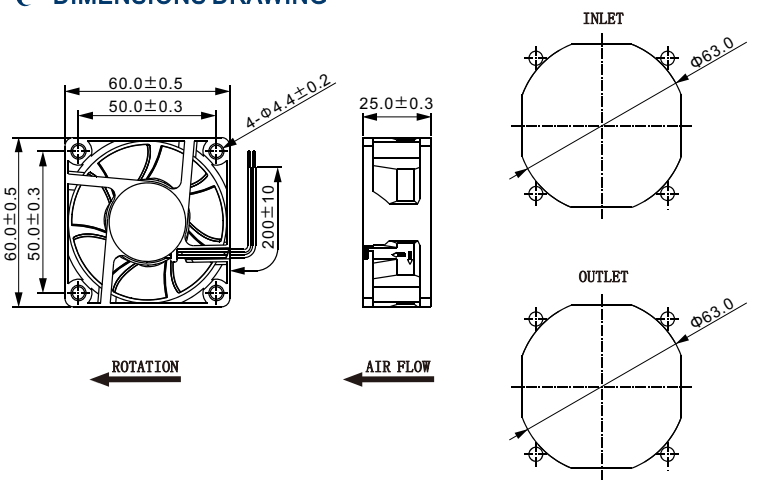

*Specifications are subject to change without notice

BeCool
www.becoolfan.com

6025-2 Axial Series



Demensions: 60X60X25 mm
Bearing Type: Ball Bearing
Function Type: FG/RD Signal,PWM pulse
Protection: Auto Restart Protection or General Options

SPECIFICATIONS

MODEL NO	VOLTAGE	CURRENT	POWER	SPEED	AIR FLOW		STATIC PRESSURE		NOISE	CURVE
	V	A	W	RPM	CMM	CFM	mmH_2O	INH_2O	(dBA)	
6025BVH-N(P/M)1	12	0.55	6.60	5000	0.673	23.84	8.12	0.320	43.5	H
6025BVU-N(P/M)1	12	1.30	15.60	8000	1.163	41.09	19.48	0.768	56.6	U
6025BVE-N(P/M)1	12	2.00	24.00	10500	1.488	52.53	32.85	1.293	63.0	E
6025BVH-N(P/M)2	24	0.35	8.40	5000	0.673	23.84	8.12	0.320	43.5	H
6025BVU-N(P/M)2	24	1.00	24.00	8000	1.163	41.09	19.48	0.768	56.6	U
6025BVE-N(P/M)2	24	1.60	38.40	10500	1.488	52.53	32.85	1.293	63.0	E
6025BVH-N(P/M)4	48	0.20	9.60	5000	0.673	23.84	8.12	0.320	43.5	H
6025BVU-N(P/M)4	48	0.80	38.40	8000	1.163	41.09	19.48	0.768	56.6	U
6025BVE-N(P/M)4	48	1.20	57.60	10500	1.488	52.53	32.85	1.293	63.0	E

PERFORMANCE CURVES

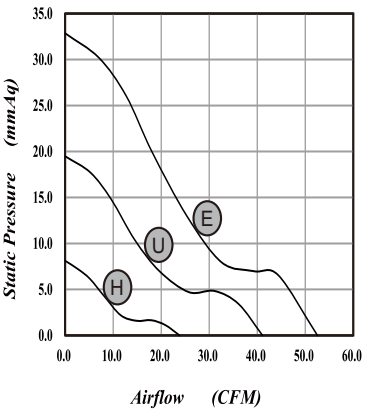

DIMENSIONS DRAWING

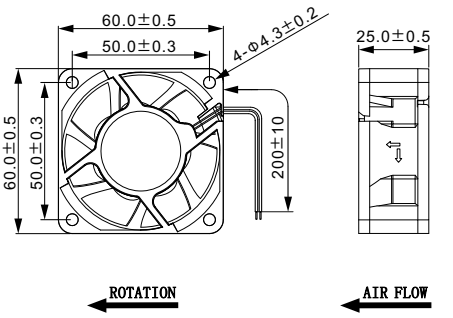

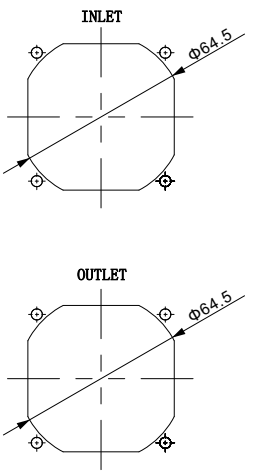

*Specifications are subject to change without notice

www.becoolfan.com

6038-1 Axial Series



Demensions: 60X60X38 mm

Bearing Type: Ball Bearing

Function Type: FG/RD Signal,PWM pulse

Protection: Auto Restart Protection or General Options

SPECIFICATIONS

MODEL NO	VOLTAGE	CURRENT	POWER	SPEED	AIR FLOW		STATIC PRESSURE		NOISE	CURVE
	V	A	W	RPM	CMM	CFM	mmH_2O	INH_2O	(dBA)	
6038BVL-P(M)1	12	0.60	7.20	6100	0.864	30.52	12.06	0.475	48.9	L
6038BVM-P(M)1	12	1.20	14.40	8500	1.254	44.27	24.47	0.963	57.7	M
6038BVH-P(M)1	12	2.50	30.00	12000	1.790	63.24	49.00	1.929	66.8	H
6038BVL-N(P/M)2	24	0.50	12.00	6100	0.864	30.52	12.06	0.475	48.9	L
6038BVM-N(P/M)2	24	1.20	28.80	8500	1.254	44.27	24.47	0.963	57.7	M
6038BVH-N(P/M)2	24	2.25	60.00	12000	1.790	63.24	49.00	1.929	66.8	H
6038BVL-N(P/M)4	48	0.25	12.00	6100	0.864	30.52	12.06	0.475	48.9	L
6038BVM-N(P/M)4	48	0.40	19.20	8500	1.254	44.27	24.47	0.963	57.7	M
6038BVH-N(P/M)4	48	0.80	38.40	12000	1.790	63.24	49.00	1.929	66.8	H

PERFORMANCE CURVES

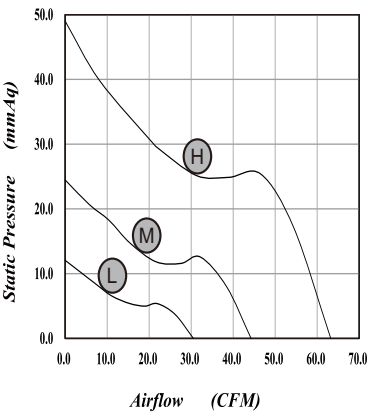

DIMENSIONS DRAWING

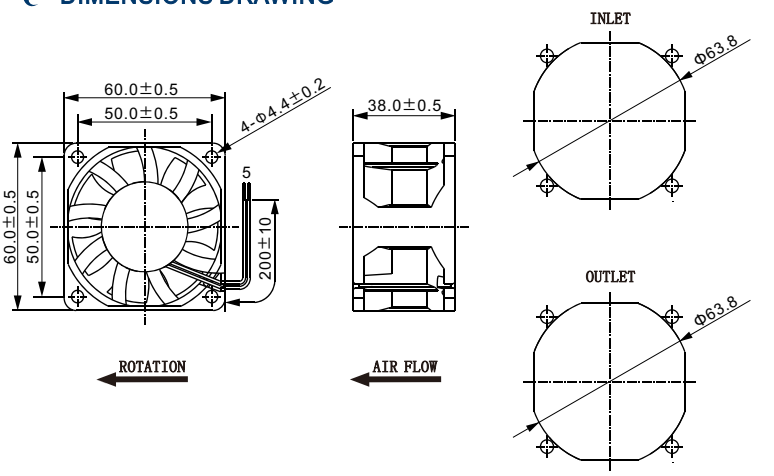

*Specifications are subject to change without notice

BeCool
www.becoolfan.com

6038-2 Axial Series



Demensions: 60X60X38 mm
Bearing Type: Ball Bearing
Function Type: FG/RD Signal,PWM pulse
Protection: Auto Restart Protection or General Options

SPECIFICATIONS

MODEL NO	VOLTAGE	CURRENT	POWER	SPEED	AIR FLOW		STATIC PRESSURE		NOISE	CURVE
	V	A	W	RPM	CMM	CFM	mmH_2O	INH_2O	(dBA)	
6038BVL-N(P/M)1	12	0.60	7.20	6000	0.709	25.04	13.44	0.529	45.7	L
6038BVM-N(P/M)1	12	1.20	14.40	10000	1.221	43.11	39.81	1.567	57.4	M
6038BVH-N(P/M)1	12	2.50	30.00	14000	0.829	59.26	65.64	2.584	64.8	H
6038BVU-N(P/M)1	12	3.50	42.00	20000	2.426	85.69	108.30	4.263	72.5	U
6038BVL-N(P/M)2	24	0.50	12.80	6000	0.709	25.04	13.44	0.529	45.7	L
6038BVM-N(P/M)2	24	1.20	28.80	10000	1.221	43.11	39.81	1.567	57.4	M
6038BVH-N(P/M)2	24	2.50	60.00	14000	0.829	59.26	65.64	2.584	64.8	H
6038BVU-N(P/M)2	24	2.50	60.00	20000	2.426	85.69	108.30	4.263	72.5	U
6038BVL-N(P/M)4	48	0.25	12.00	6000	0.709	25.04	13.44	0.529	45.7	L
6038BVM-N(P/M)4	48	0.40	19.20	10000	1.221	43.11	39.81	1.567	57.4	M
6038BVH-N(P/M)4	48	0.80	38.40	14000	0.829	59.26	65.64	2.584	64.8	H
6038BVU-N(P/M)4	48	1.20	57.00	20000	2.426	85.69	108.30	4.263	72.5	U

PERFORMANCE CURVES

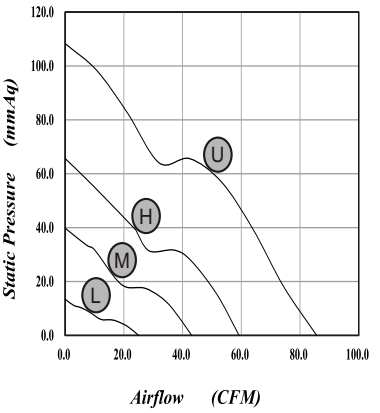

DIMENSIONS DRAWING

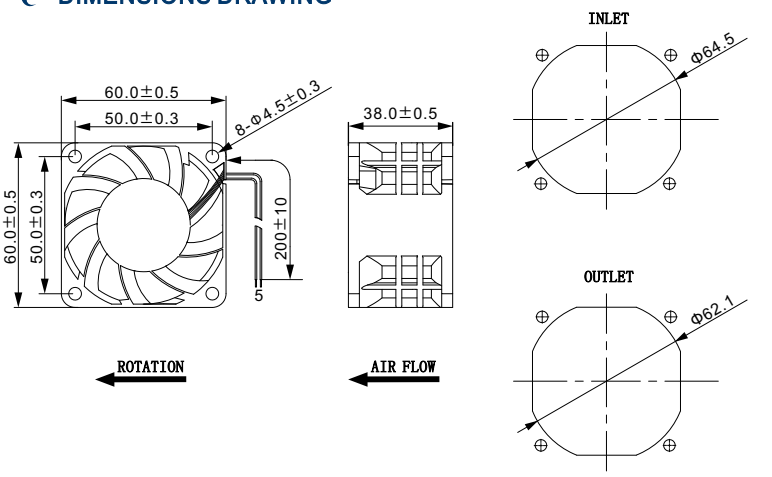

*Specifications are subject to change without notice

www.becoolfan.com

6056-1 Axial Series

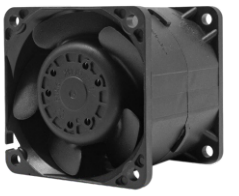

Demensions: 60X60X56 mm

Bearing Type: Ball Bearing

Function Type: FG/RD Signal,PWM pulse

Protection: Auto Restart Protection or General Options

SPECIFICATIONS

MODEL NO	VOLTAGE	CURRENT	POWER	SPEED	AIR FLOW		STATIC PRESSURE		NOISE	CURVE
	V	A	W	RPM	CMM	CFM	mmH2O	INH2O	(dBA)	
6056BVH-N(P/M)1	12	3.40	42.00	17700/14400	1.816	64.12	141.60	5.575	77.2	H
6056BVE-N(P/M)1	12	5.50	66.00	21000/19500	2.291	80.92	207.60	8.173	80.3	E

PERFORMANCE CURVES

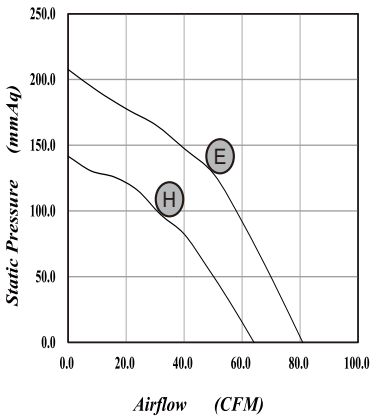

DIMENSIONS DRAWING

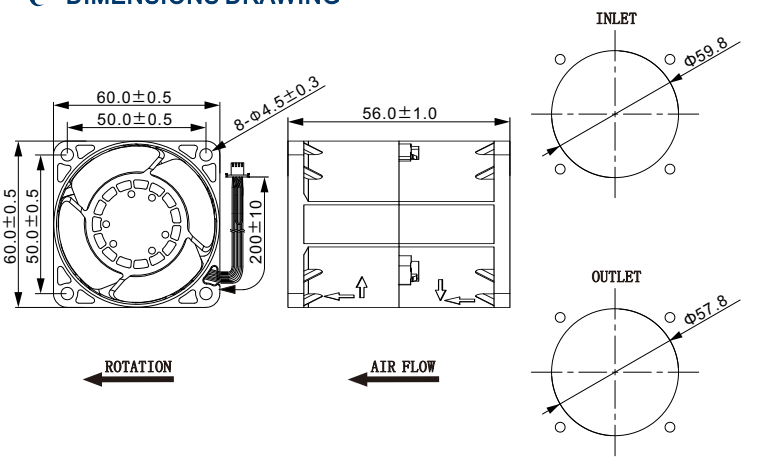

*Specifications are subject to change without notice

www.becoolfan.com

6056-2 Axial Series

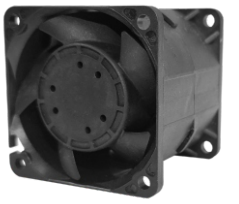

Demensions: 60X60X56 mm

Bearing Type: Ball Bearing

Function Type: FG/RD Signal,PWM pulse

Protection: Auto Restart Protection or General Options

SPECIFICATIONS

MODEL NO	VOLTAGE	CURRENT	POWER	SPEED	AIR FLOW		STATIC PRESSURE		NOISE	CURVE
	V	A	W	RPM	CMM	CFM	mmH_2O	INH_2O	(dBA)	
6056BVH-N(P/M)1	12	3.50	42.00	14500/13000	2.045	72.24	90.30	3.555	72.4	H
6056BVU-N(P/M)1	12	4.50	54.00	16500/14500	2.306	81.46	123.70	4.870	76.5	U
6056BVE-N(P/M)1	12	5.50	66.00	17800/15800	2.508	88.60	141.60	5.720	80.7	E

PERFORMANCE CURVES

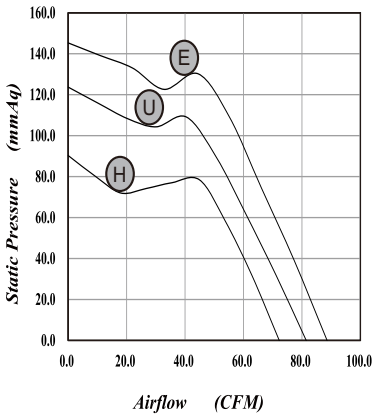

DIMENSIONS DRAWING

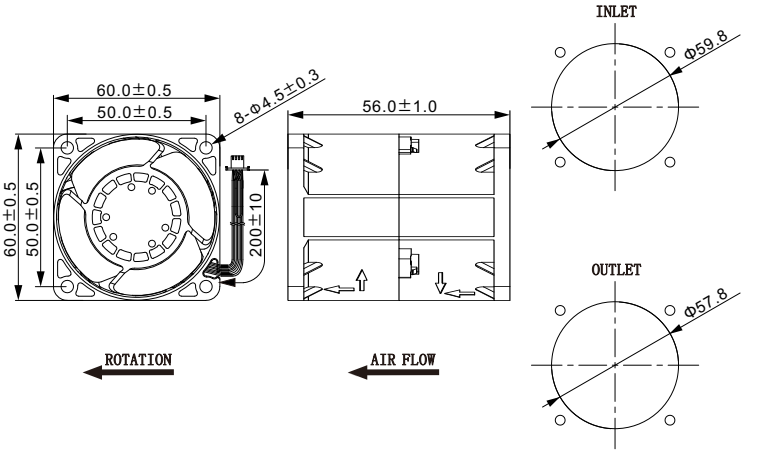

*Specifications are subject to change without notice

BeCool
www.becoolfan.com

7010 Axial Series



Demensions: 70X70X10 mm
Bearing Type: FDB,Hydraulic,Ball Bearing
Function Type: FG/RD Signal,PWM pulse
Protection: Auto Restart Protection or General Options

SPECIFICATIONS

MODEL NO	VOLTAGE	CURRENT	POWER	SPEED	AIR FLOW		STATIC PRESSURE		NOISE	CURVE
	V	A	W	RPM	CMM	CFM	mmH_2O	INH_2O	(dBA)	
7010B/RVL-N(P/M)5	5	0.20	1.00	2500	0.372	13.13	1.06	0.042	25.0	L
7010B/RVM-N(P/M)5	5	0.40	2.00	3100	0.459	16.21	1.55	0.061	30.8	M
7010B/RVH-N(P/M)5	5	0.60	3.00	4300	0.639	22.56	2.91	0.115	40.5	H
7010B/RVL-N(P/M)1	12	0.12	1.44	2500	0.372	13.13	1.06	0.042	25.0	L
7010B/RVM-N(P/M)1	12	0.28	3.36	3100	0.459	16.21	1.55	0.061	30.8	M
7010B/RVH-N(P/M)1	12	0.45	5.40	4300	0.639	22.56	2.91	0.115	40.5	H
7010B/RVL-N(P/M)2	24	0.10	2.40	2500	0.372	13.13	1.06	0.042	25.0	L
7010B/RVM-N(P/M)2	24	0.20	4.80	3100	0.459	16.21	1.55	0.061	30.8	M
7010B/RVH-N(P/M)2	24	0.38	9.12	4300	0.639	22.56	2.91	0.115	40.5	H

PERFORMANCE CURVES

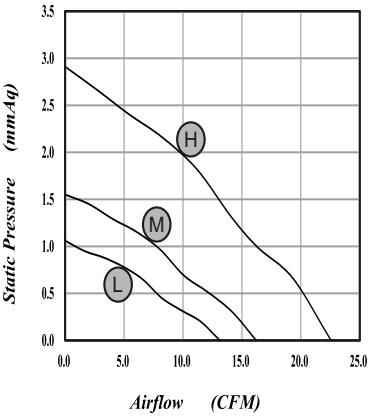

DIMENSIONS DRAWING

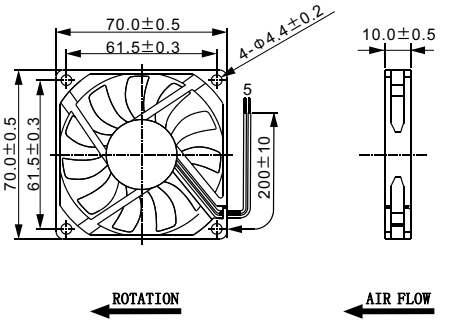

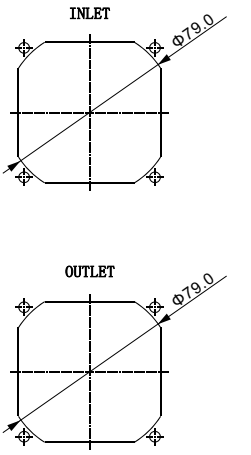

*Specifications are subject to change without notice

www.becoolfan.com

7015 Axial Series



Demensions: 70X70X15 mm

Bearing Type: FDB,Hydraulic,Ball Bearing

Function Type: FG/RD Signal,PWM pulse

Protection: Auto Restart Protection or General Options

SPECIFICATIONS

MODEL NO	VOLTAGE	CURRENT	POWER	SPEED	AIR FLOW		STATIC PRESSURE		NOISE	CURVE
	V	A	W	RPM	CMM	CFM	mmH_2O	INH_2O	(dBA)	
7015B/RVL-N(P/M)1	12	0.24	2.88	2600	0.458	16.18	1.62	0.064	25.0	L
7015B/RVM-N(P/M)1	12	0.35	4.20	3800	0.695	24.53	3.42	0.135	33.3	M
7015B/RVH-N(P/M)1	12	0.55	6.60	6000	1.206	42.61	8.43	0.331	49.0	H
7015B/RVL-N(P/M)2	24	0.12	2.88	2600	0.458	16.18	1.62	0.064	25.0	L
7015B/RVM-N(P/M)2	24	0.22	5.28	3800	0.695	24.53	3.42	0.135	33.3	M
7015B/RVH-N(P/M)2	24	0.40	9.60	6000	1.206	42.61	8.43	0.331	49.0	H

PERFORMANCE CURVES

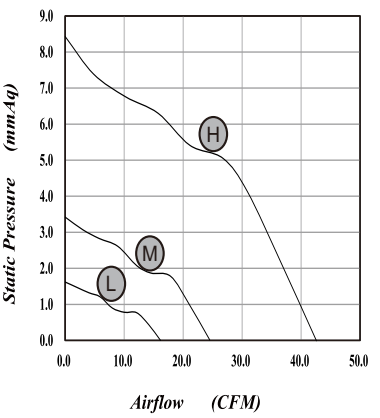

DIMENSIONS DRAWING

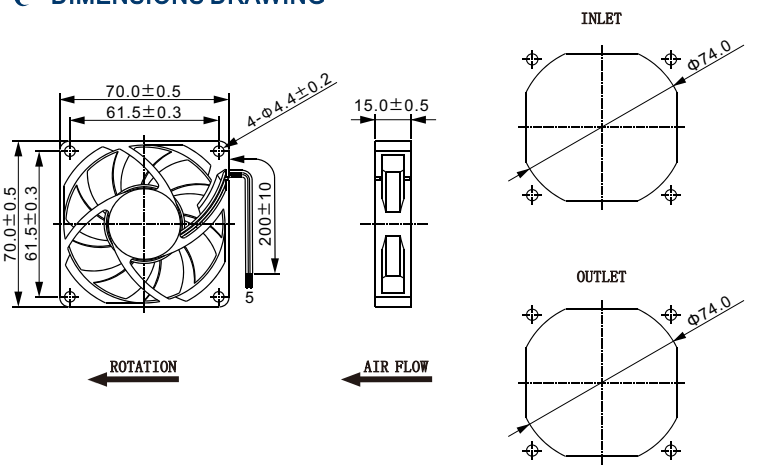

*Specifications are subject to change without notice

BeCool
www.becoolfan.com

7020 Axial Series



Demensions: 70X70X20 mm
Bearing Type: FDB,Hydraulic,Ball Bearing
Function Type: FG/RD Signal,PWM pulse
Protection: Auto Restart Protection or General Options

SPECIFICATIONS

MODEL NO	VOLTAGE	CURRENT	POWER	SPEED	AIR FLOW		STATIC PRESSURE		NOISE	CURVE
	V	A	W	RPM	CMM	CFM	mmH_2O	INH_2O	(dBA)	
7020BVL-N(P/M)1	12	0.15	1.80	2400	0.573	20.22	1.55	0.061	27.5	L
7020BVM-N(P/M)1	12	0.35	4.20	3500	0.859	30.34	3.24	0.128	34.7	M
7020BVH-N(P/M)1	12	0.55	6.60	4400	1.091	38.52	5.22	0.206	41.1	H
7020BVL-N(P/M)2	24	0.10	2.40	2400	0.573	20.22	1.55	0.061	27.5	L
7020BVM-N(P/M)2	24	0.25	6.00	3500	0.859	30.34	3.24	0.128	34.7	M
7020BVH-N(P/M)2	24	0.55	13.20	4400	1.091	38.52	5.22	0.206	41.1	H

PERFORMANCE CURVES

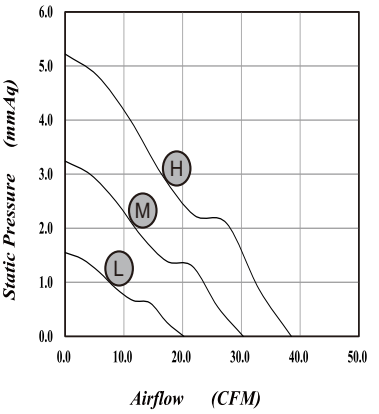

DIMENSIONS DRAWING

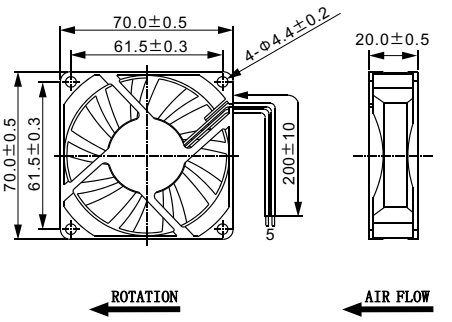

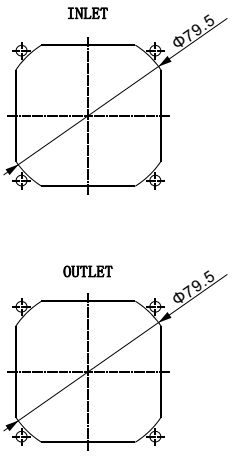

*Specifications are subject to change without notice

www.becoolfan.com

7025-1 Axial Series



Demensions: 70X70X25 mm

Bearing Type: FDB,Hydraulic,Ball Bearing

Function Type: FG/RD Signal,PWM pulse

Protection: Auto Restart Protection or General Options

SPECIFICATIONS

MODEL NO	VOLTAGE	CURRENT	POWER	SPEED	AIR FLOW		STATIC PRESSURE		NOISE	CURVE
	V	A	W	RPM	CMM	CFM	mmH_2O	INH_2O	(dBA)	
7025B/RVL-N(P/M)1	12	0.25	3.00	3000	0.736	25.98	3.49	0.137	30.7	L
7025B/RVM-N(P/M)1	12	0.35	4.20	4200	1.003	35.40	6.31	0.248	38.0	M
7025B/RVH-N(P/M)1	12	0.55	6.60	5500	1.313	46.36	10.82	0.426	43.9	H
7025B/RVL-N(P/M)2	24	0.10	3.60	3000	0.736	25.98	3.49	0.137	30.7	L
7025B/RVM-N(P/M)2	24	0.20	6.00	4200	1.003	35.40	6.31	0.248	38.0	M
7025B/RVH-N(P/M)2	24	0.32	8.40	5500	1.313	46.36	10.82	0.426	43.9	H

PERFORMANCE CURVES

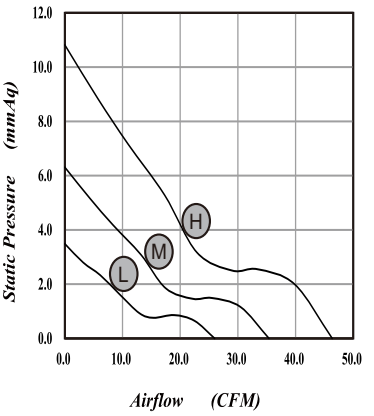

DIMENSIONS DRAWING

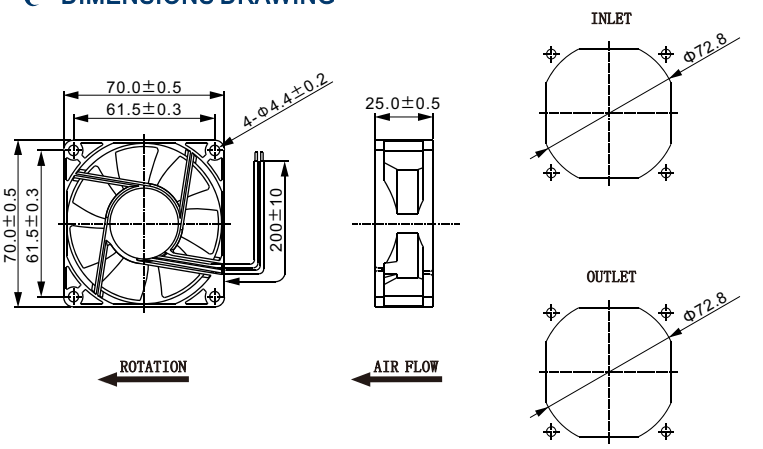

*Specifications are subject to change without notice

www.becoolfan.com

7025-2 Axial Series



Demensions: 70X70X25 mm

Bearing Type: FDB,Hydraulic,Ball Bearing

Function Type: FG/RD Signal,PWM pulse

Protection: Auto Restart Protection or General Options

SPECIFICATIONS

MODEL NO	VOLTAGE	CURRENT	POWER	SPEED	AIR FLOW		STATIC PRESSURE		NOISE	CURVE
	V	A	W	RPM	CMM	CFM	mmH_2O	INH_2O	(dBA)	
7025B/RVL-N(P/M)1	12	0.25	3.00	3000	0.736	27.05	4.39	0.172	31.4	L
7025B/RVM-N(P/M)1	12	0.35	4.20	4500	1.081	38.18	6.91	0.272	40.2	M
7025B/RVH-N(P/M)1	12	0.55	6.60	6000	1.406	49.68	13.39	0.527	46.4	H
7025B/RVL-N(P/M)2	24	0.10	2.40	3000	0.736	27.05	4.39	0.172	31.4	L
7025B/RVM-N(P/M)2	24	0.20	4.80	4500	1.081	38.18	6.91	0.272	40.2	M
7025B/RVH-N(P/M)2	24	0.32	7.68	6000	1.406	49.68	13.39	0.527	46.4	H

PERFORMANCE CURVES

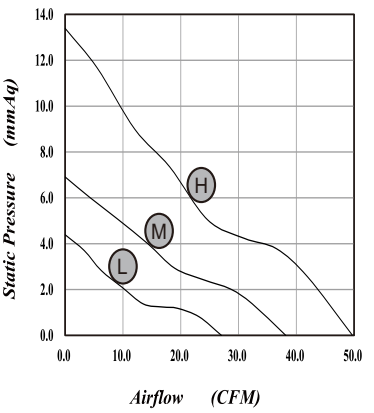

DIMENSIONS DRAWING

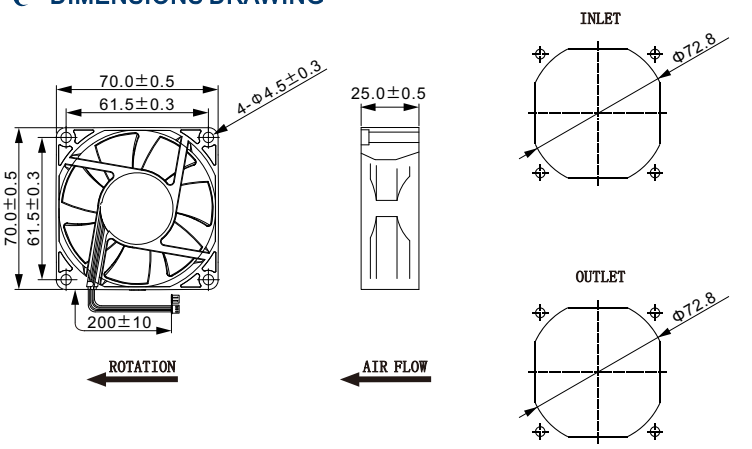

*Specifications are subject to change without notice

BeCool
www.becoolfan.com

8010 Axial Series



Demensions: 80X80X10 mm
Bearing Type: FDB,Hydraulic,Ball Bearing
Function Type: FG/RD Signal,PWM pulse
Protection: Auto Restart Protection or General Options

SPECIFICATIONS

MODEL NO	VOLTAGE	CURRENT	POWER	SPEED	AIR FLOW		STATIC PRESSURE		NOISE	CURVE
	V	A	W	RPM	CMM	CFM	mmH_2O	INH_2O	(dBA)	
8010B/RVL-N(P/M)5	5	0.16	0.80	2000	0.407	14.39	0.86	0.034	23.1	L
8010B/RVM-N(P/M)5	5	0.25	1.25	2500	0.504	17.80	1.30	0.051	27.2	M
8010B/RVH-N(P/M)5	5	0.70	3.50	4200	0.895	31.64	3.43	0.135	38.9	H
8010B/RVL-N(P/M)1	12	0.10	1.20	2000	0.407	14.39	0.86	0.034	23.1	L
8010B/RVM-N(P/M)1	12	0.14	1.68	2500	0.504	17.80	1.30	0.051	27.2	M
8010B/RVH-N(P/M)1	12	0.30	3.60	4200	0.895	31.64	3.43	0.135	38.9	H
8010B/RVL-N(P/M)2	24	0.08	1.92	2000	0.407	14.39	0.86	0.034	23.1	L
8010B/RVM-N(P/M)2	24	0.12	2.88	2500	0.504	17.80	1.30	0.051	27.2	M
8010B/RVH-N(P/M)2	24	0.28	6.72	4200	0.895	31.64	3.43	0.135	38.9	H

PERFORMANCE CURVES

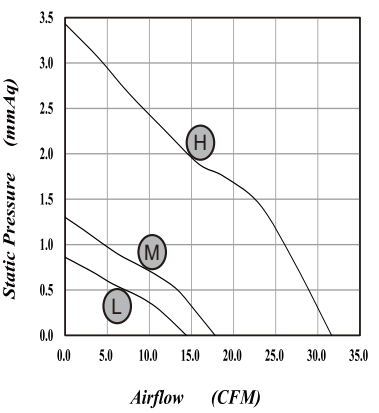

DIMENSIONS DRAWING

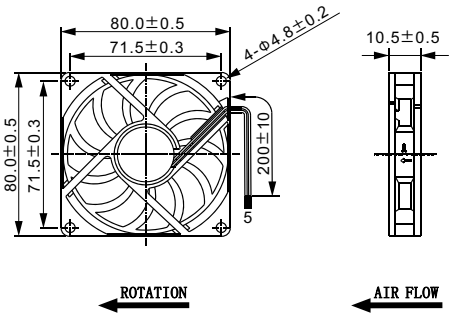

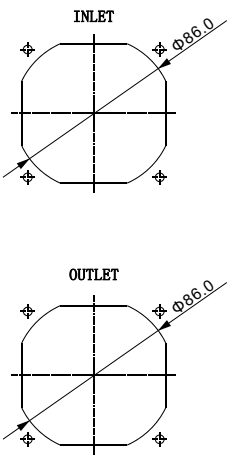

*Specifications are subject to change without notice

BeCool
www.becoolfan.com

8015 Axial Series



Demensions: 80X80X15 mm
Bearing Type: FDB,Hydraulic,Ball Bearing
Function Type: FG/RD Signal,PWM pulse
Protection: Auto Restart Protection or General Options

SPECIFICATIONS

MODEL NO	VOLTAGE	CURRENT	POWER	SPEED	AIR FLOW		STATIC PRESSURE		NOISE	CURVE
	V	A	W	RPM	CMM	CFM	mmH_2O	INH_2O	(dBA)	
AD8015B/R05L-N(P/M)	5	0.12	0.60	2000	0.554	19.56	1.21	0.048	26.9	L
AD8015B/R05M-N(P/M)	5	0.25	1.25	3000	0.887	31.34	2.81	0.111	35.4	M
AD8015B/R05H-N(P/M)	5	0.70	3.50	4000	1.183	41.79	4.57	0.180	42.6	H
AD8015B/R12L-N(P/M)	12	0.15	1.80	2000	0.554	19.56	1.21	0.048	26.9	L
AD8015B/R12M-N(P/M)	12	0.32	3.84	3000	0.887	31.34	2.81	0.111	35.4	M
AD8015B/R12H-N(P/M)	12	0.60	7.20	4000	1.183	41.79	4.57	0.180	42.6	H
AD8015B/R24L-N(P/M)	24	0.10	2.40	2000	0.554	19.56	1.21	0.048	26.9	L
AD8015B/R24M-N(P/M)	24	0.18	4.32	3000	0.887	31.34	2.81	0.111	35.4	M
AD8015B/R24H-N(P/M)	24	0.45	10.80	4000	1.183	41.79	4.57	0.180	42.6	H

PERFORMANCE CURVES

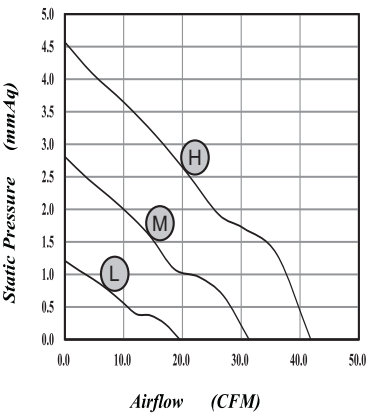

DIMENSIONS DRAWING

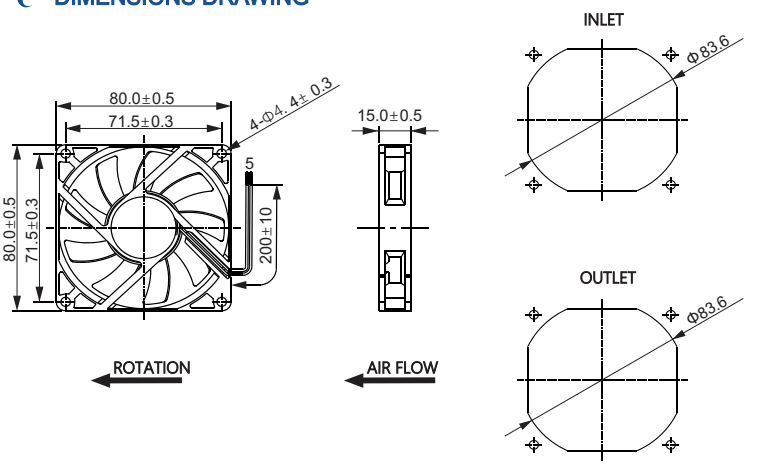

*Specifications are subject to change without notice

BeCool
www.becoolfan.com

8020 Axial Series



Demensions: 80X80X20 mm
Bearing Type: FDB,Hydraulic,Ball Bearing
Function Type: FG/RD Signal,PWM pulse
Protection: Auto Restart Protection or General Options

SPECIFICATIONS

MODEL NO	VOLTAGE	CURRENT	POWER	SPEED	AIR FLOW		STATIC PRESSURE		NOISE	CURVE
	V	A	W	RPM	CMM	CFM	mmH_2O	INH_2O	(dBA)	
8020B/RVL-N(P/M)5	5	0.28	1.40	2000	0.491	17.34	1.60	0.063	24.5	L
8020B/RVM-N(P/M)5	5	0.45	2.25	3500	0.850	30.04	4.26	0.168	37.0	M
8020B/RVH-N(P/M)5	5	0.65	3.25	5000	1.225	43.30	8.23	0.324	46.8	H
8020B/RVL-N(P/M)1	12	0.15	1.80	2000	0.491	17.34	1.60	0.063	24.5	L
8020B/RVM-N(P/M)1	12	0.40	4.80	3500	0.850	30.04	4.26	0.168	37.0	M
8020B/RVH-N(P/M)1	12	0.50	6.00	5000	1.225	43.30	8.23	0.324	46.8	H
8020B/RVL-N(P/M)2	24	0.10	2.40	2000	0.491	17.34	1.60	0.063	24.5	L
8020B/RVM-N(P/M)2	24	0.25	6.00	3500	0.850	30.04	4.26	0.168	37.0	M
8020B/RVH-N(P/M)2	24	0.45	10.80	5000	1.225	43.30	8.23	0.324	46.8	H

PERFORMANCE CURVES

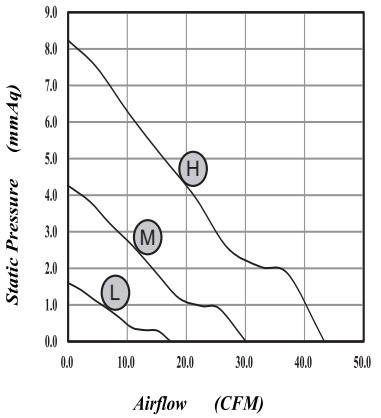

DIMENSIONS DRAWING

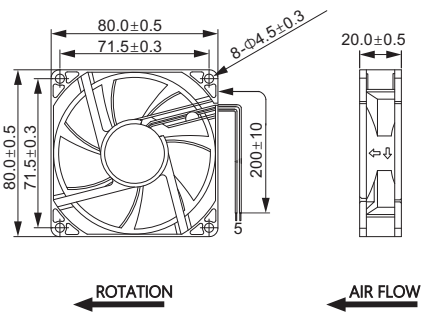

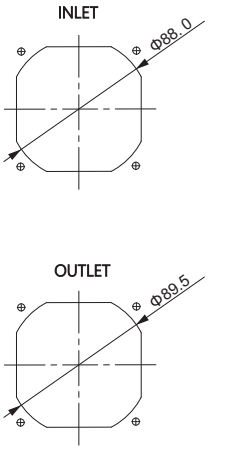

*Specifications are subject to change without notice

BeCool
www.becoolfan.com

8025-1 Axial Series

Demensions: 80X80X25 mm
Bearing Type: FDB,Hydraulic,Ball Bearing
Function Type: FG/RD Signal,PWM pulse
Protection: Auto Restart Protection or General Options

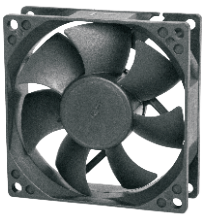

SPECIFICATIONS

MODEL NO	VOLTAGE	CURRENT	POWER	SPEED	AIR FLOW		STATIC PRESSURE		NOISE	CURVE
	V	A	W	RPM	CMM	CFM	mmH_2O	INH_2O	(dBA)	
AD8025B/R12L-N(P/M)	12	0.13	1.56	1800	0.663	23.41	1.57	0.062	18.1	L
AD8025B/R12M-N(P/M)	12	0.26	3.12	3100	1.120	39.55	4.03	0.158	32.7	M
AD8025B/R12H-N(P/M)	12	0.51	6.12	4800	1.725	60.90	9.01	0.354	48.1	H
AD8025B/R24L-N(P/M)	24	0.11	2.64	1800	0.663	23.41	1.57	0.062	18.1	L
AD8025B/R24M-N(P/M)	24	0.22	5.28	3100	1.120	39.55	4.03	0.158	32.7	M
AD8025B/R24H-N(P/M)	24	0.38	9.12	4800	1.725	60.90	9.01	0.354	48.1	H
AD8025B/R48L-N(P/M)	48	0.08	3.84	1800	0.663	23.41	1.57	0.062	18.1	L
AD8025B/R48M-N(P/M)	48	0.18	8.64	3100	1.120	39.55	4.03	0.158	32.7	M
AD8025B/R48H-N(P/M)	48	0.30	14.40	4800	1.725	60.90	9.01	0.354	48.1	H

PERFORMANCE CURVES

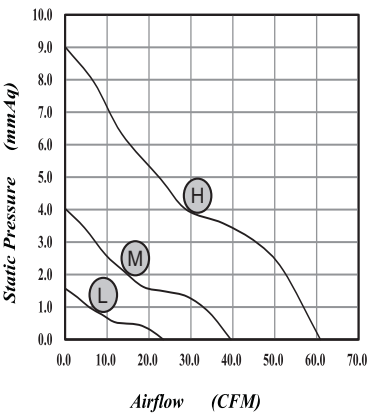

DIMENSIONS DRAWING

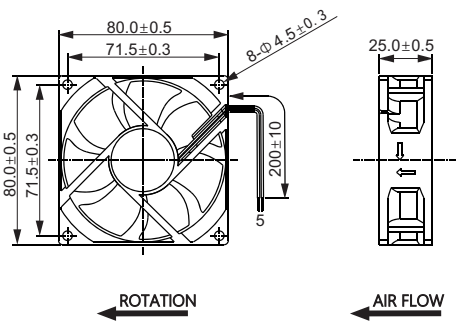

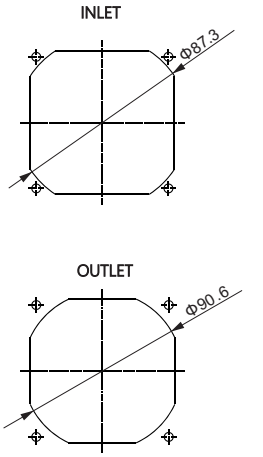

*Specifications are subject to change without notice

www.becoolfan.com

8025-2 Axial Series

Demensions: 80X80X25 mm

Bearing Type: FDB,Hydraulic,Ball Bearing

Function Type: FG/RD Signal,PWM pulse

Protection: Auto Restart Protection or General Options

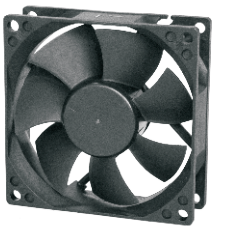

SPECIFICATIONS

MODEL NO	VOLTAGE	CURRENT	POWER	SPEED	AIR FLOW		STATIC PRESSURE		NOISE	CURVE
	V	A	W	RPM	CMM	CFM	mmH_2O	INH_2O	(dBA)	
AD8025B/R12L-N(P/M)	12	0.13	1.56	2000	0.661	23.36	1.76	0.069	25.3	L
AD8025B/R12M-N(P/M)	12	0.26	3.12	3000	0.988	34.88	3.57	0.141	32.7	M
AD8025B/R12H-N(P/M)	12	0.51	6.12	4500	1.580	55.79	8.78	0.346	44.4	H
AD8025B/R24L-N(P/M)	24	0.11	2.64	2000	0.661	23.36	1.76	0.069	25.3	L
AD8025B/R24M-N(P/M)	24	0.22	5.28	3000	0.988	34.88	3.57	0.141	32.7	M
AD8025B/R24H-N(P/M)	24	0.38	9.12	4500	1.580	55.79	8.78	0.346	44.4	H
AD8025B/R48L-N(P/M)	48	0.08	3.84	2000	0.661	23.36	1.76	0.069	25.3	L
AD8025B/R48M-N(P/M)	48	0.18	8.64	3000	0.988	34.88	3.57	0.141	32.7	M
AD8025B/R48H-N(P/M)	48	0.30	14.40	4500	1.580	55.79	8.78	0.346	44.4	H

PERFORMANCE CURVES

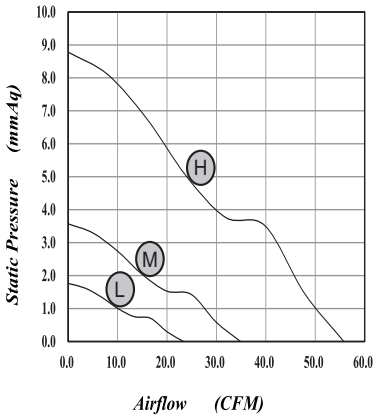

DIMENSIONS DRAWING

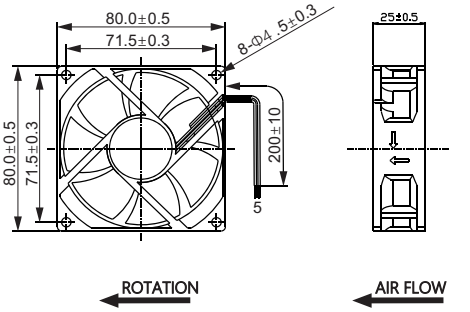

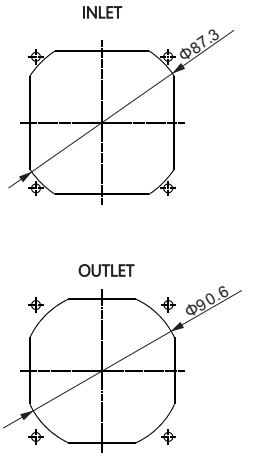

*Specifications are subject to change without notice

www.becoolfan.com

8025-3 Axial Series

Demensions: 80X80X25 mm

Bearing Type: FDB,Hydraulic,Ball Bearing

Function Type: FG/RD Signal,PWM pulse

Protection: Auto Restart Protection or General Options



SPECIFICATIONS

MODEL NO	VOLTAGE	CURRENT	POWER	SPEED	AIR FLOW		STATIC PRESSURE		NOISE	CURVE
	V	A	W	RPM	CMM	CFM	mmH_2O	INH_2O	(dBA)	
AD8025B/R12L-N(P/M)	12	0.13	1.56	2500	0.919	32.47	3.30	0.130	29.4	L
AD8025B/R12M-N(P/M)	12	0.26	3.12	4000	1.474	52.10	8.11	0.320	40.0	M
AD8025B/R12H-N(P/M)	12	0.51	6.12	5100	1.925	68.03	12.75	0.502	46.6	H
AD8025B/R12U-N(P/M)	12	1.20	14.40	7000	2.620	92.54	21.03	0.827	59.2	U
AD8025B/R24L-N(P/M)	24	0.11	2.64	2500	0.919	32.47	3.30	0.130	29.4	L
AD8025B/R24M-N(P/M)	24	0.22	5.28	4000	1.474	52.10	8.11	0.320	40.0	M
AD8025B/R24H-N(P/M)	24	0.38	9.12	5100	1.925	68.03	12.75	0.502	46.6	H
AD8025B/R24U-N(P/M)	24	0.65	15.60	7000	2.620	92.54	21.03	0.827	59.2	U
AD8025B/R48L-N(P/M)	48	0.08	3.84	2500	0.919	32.47	3.30	0.130	29.4	L
AD8025B/R48M-N(P/M)	48	0.18	8.64	4000	1.474	52.10	8.11	0.320	40.0	M
AD8025B/R48H-N(P/M)	48	0.30	14.40	5100	1.925	68.03	12.75	0.502	46.6	H
AD8025B/R48U-N(P/M)	48	0.45	21.60	7000	2.620	92.54	21.03	0.827	59.2	U

PERFORMANCE CURVES

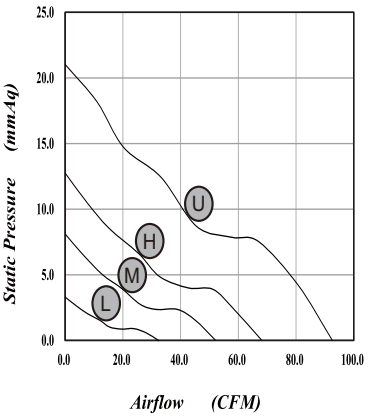

DIMENSIONS DRAWING

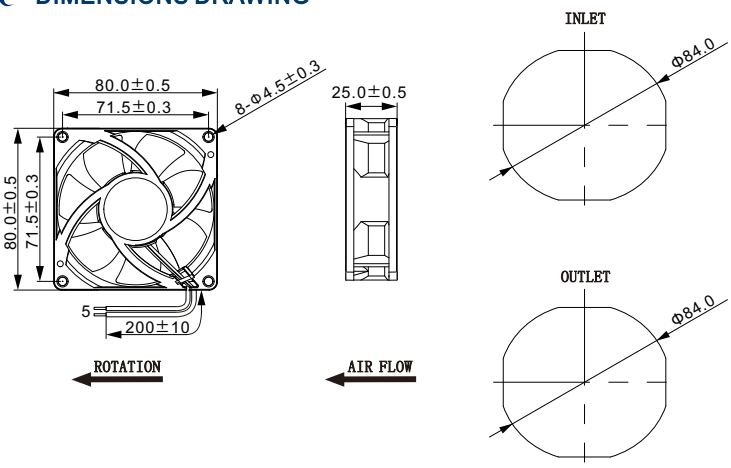

*Specifications are subject to change without notice

BeCool
www.becoolfan.com

8038-1 Axial Series

Demensions: 80X80X38 mm
Bearing Type: Ball Bearing
Function Type: FG/RD Signal,PWM pulse
Protection: Auto Restart Protection or General Options



SPECIFICATIONS

MODEL NO	VOLTAGE	CURRENT	POWER	SPEED	AIR FLOW		STATIC PRESSURE		NOISE	CURVE
	V	A	W	RPM	CMM	CFM	mmH_2O	INH_2O	(dBA)	
8038BVL-N(P/M)1	12	0.70	8.40	5000	1.692	59.78	17.18	0.677	50.80	L
8038BVM-N(P/M)1	12	1.70	20.40	6500	2.257	79.76	29.51	1.163	56.46	M
8038BVH-N(P/M)1	12	2.80	33.60	7500	2.564	90.60	37.26	1.468	60.90	H
8038BVL-N(P/M)2	24	0.50	12.00	5000	1.692	59.78	17.18	0.677	50.80	L
8038BVM-N(P/M)2	24	1.00	24.00	6500	2.257	79.76	29.51	1.163	56.46	M
8038BVH-N(P/M)2	24	1.80	43.20	7500	2.564	90.60	37.26	1.468	60.90	H
8038BVL-N(P/M)4	48	0.25	12.00	5000	1.692	59.78	17.18	0.677	50.80	L
8038BVM-N(P/M)4	48	0.55	26.40	6500	2.257	79.76	29.51	1.163	56.46	M
8038BVH-N(P/M)4	48	0.85	40.80	7500	2.564	90.60	37.26	1.468	60.90	H

PERFORMANCE CURVES

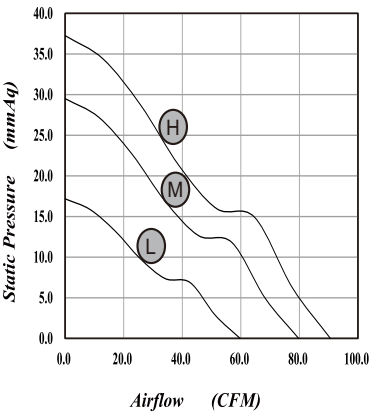

DIMENSIONS DRAWING

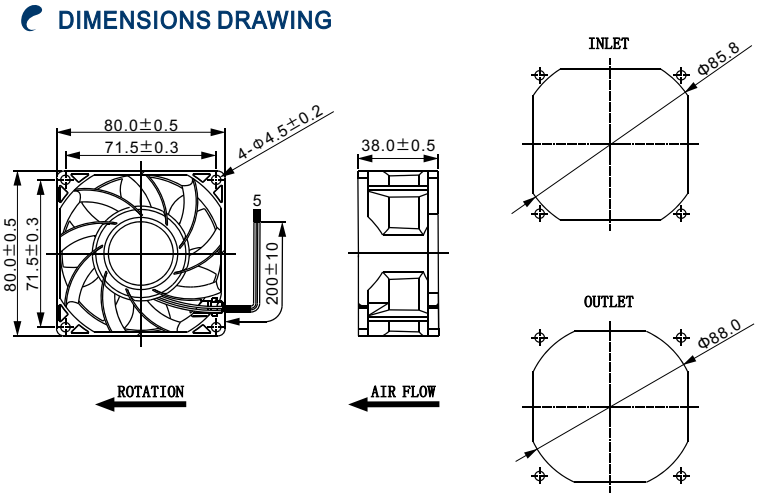

*Specifications are subject to change without notice

www.becoolfan.com

8038-2 Axial Series



Demensions: 80X80X35 mm

Bearing Type: Ball Bearing

Function Type: FG/RD Signal,PWM pulse

Protection: Auto Restart Protection or General Options

SPECIFICATIONS

MODEL NO	VOLTAGE	CURRENT	POWER	SPEED	AIR FLOW		STATIC PRESSURE		NOISE	CURVE
	V	A	W	RPM	CMM	CFM	mmH2O	INH2O	(dBA)	
8038BVL-N(P/M)1	12	0.70	8.40	6000	1.361	48.03	17.08	0.672	49.20	L
8038BVM-N(P/M)1	12	1.70	20.40	8800	1.957	69.07	33.44	1.316	57.50	M
8038BVH-N(P/M)1	12	2.80	33.60	12000	2.677	94.51	60.00	2.362	64.20	H
8038BVL-N(P/M)2	24	0.50	12.00	6000	1.361	48.03	17.08	0.672	49.20	L
8038BVM-N(P/M)2	24	1.00	24.00	8800	1.957	69.07	33.44	1.316	57.50	M
8038BVH-N(P/M)2	24	1.80	43.20	12000	2.677	94.51	60.00	2.362	64.20	H
8038BVL-N(P/M)4	48	0.25	12.00	6000	1.361	48.03	17.08	0.672	49.20	L
8038BVM-N(P/M)4	48	0.55	26.40	8800	1.957	69.07	33.44	1.316	57.50	M
8038BVH-N(P/M)4	48	0.85	40.80	12000	2.677	94.51	60.00	2.362	64.20	H

PERFORMANCE CURVES

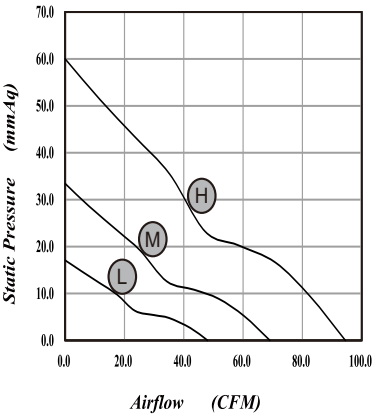

DIMENSIONS DRAWING

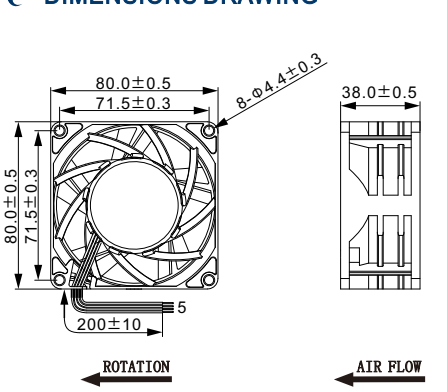

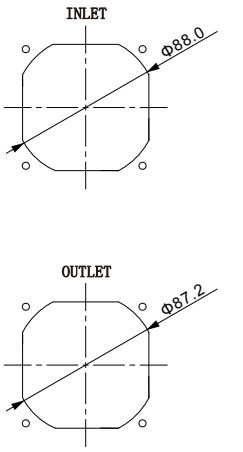

*Specifications are subject to change without notice

www.becoolfan.com

8038-3 Axial Series



Demensions: 80X80X38 mm

Bearing Type: Ball Bearing

Function Type: FG/RD Signal,PWM pulse

Protection: Auto Restart Protection or General Options

SPECIFICATIONS

MODEL NO	VOLTAGE	CURRENT	POWER	SPEED	AIR FLOW		STATIC PRESSURE		NOISE	CURVE
	V	A	W	RPM	CMM	CFM	mmH_2O	INH_2O	(dBA)	
8038BVL-N(P/M)1	12	0.70	8.40	8000	1.750	61.72	34.73	1.370	55.7	L
8038BVM-N(P/M)1	12	1.70	20.10	12000	2.680	94.33	76.24	3.000	66.0	M
8038BVH-N(P/M)1	12	2.80	33.60	15000	3.380	119.60	108.91	4.290	70.6	H
8038BVL-N(P/M)2	24	0.50	12.00	8000	1.750	61.72	34.73	1.370	55.7	L
8038BVM-N(P/M)2	24	1.00	24.00	12000	2.680	94.33	76.24	3.000	66.0	M
8038BVH-N(P/M)2	24	1.80	43.20	15000	3.380	119.60	108.91	4.290	70.6	H
8038BVL-N(P/M)4	48	0.25	12.00	8000	1.750	61.72	34.73	1.370	55.7	L
8038BVM-N(P/M)4	48	0.55	26.40	12000	2.680	94.33	76.24	3.000	66.0	M
8038BVH-N(P/M)4	48	0.85	40.80	15000	3.380	119.60	108.91	4.290	70.6	H

PERFORMANCE CURVES

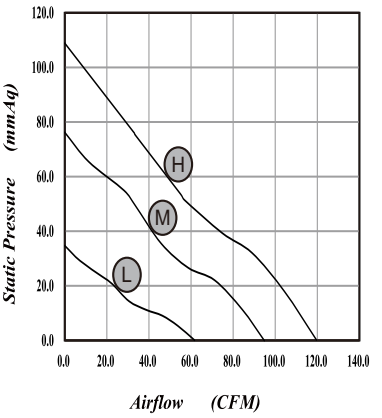

DIMENSIONS DRAWING

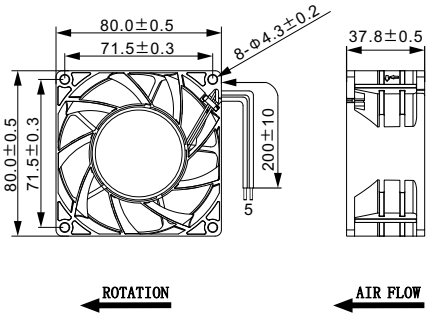

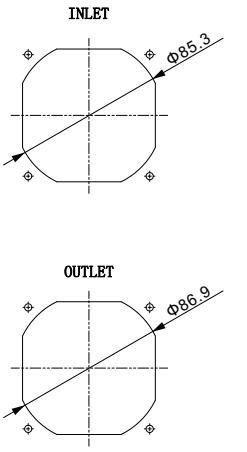

*Specifications are subject to change without notice

www.becoolfan.com

8056 Axial Series



Demensions: 80X80X56 mm

Bearing Type: Ball Bearing

Function Type: FG/RD Signal,PWM pulse

Protection: Auto Restart Protection or General Options

SPECIFICATIONS

MODEL NO	VOLTAGE	CURRENT	POWER	SPEED	AIR FLOW		STATIC PRESSURE		NOISE	CURVE
	V	A	W	RPM	CMM	CFM	mmH_2O	INH_2O	(dBA)	
8056BVU-N(P/M)1	12	6.00	72.00	16300	3.685	130.07	175.29	6.901	74.6	U

PERFORMANCE CURVES

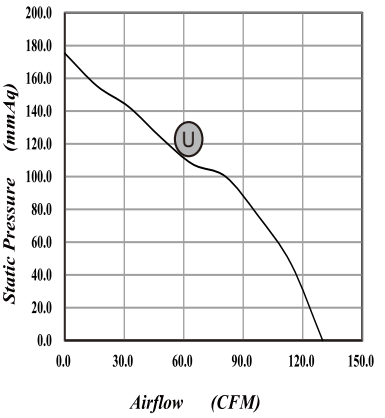

DIMENSIONS DRAWING

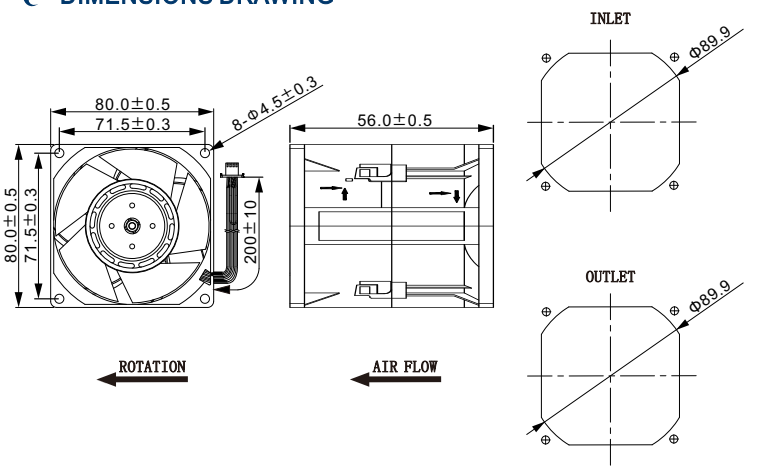

*Specifications are subject to change without notice

BeCool
www.becoolfan.com

9025 Axial Series

Demensions: 95X95X25 mm
Bearing Type: FDB,Hydraulic,Ball Bearing
Function Type: FG/RD Signal,PWM pulse
Protection: Auto Restart Protection or General Options

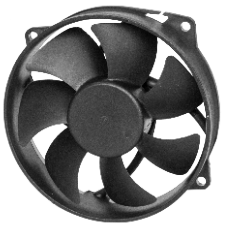

SPECIFICATIONS

MODEL NO	VOLTAGE	CURRENT	POWER	SPEED	AIR FLOW		STATIC PRESSURE		NOISE	CURVE
	V	A	W	RPM	CMM	CFM	mmH_2O	INH_2O	(dBA)	
AD9225B/R5L-N(P/M)	5	0.24	1.20	1800	0.800	28.14	1.49	0.060	26.2	L
AD9225B/R5M-N(P/M)	5	0.42	2.10	2800	1.270	44.96	3.51	0.140	32.5	M
AD9225B/R5H-N(P/M)	5	0.70	3.50	4000	1.800	63.76	6.56	0.260	42.4	H
AD9225B/R12L-N(P/M)	12	0.21	2.52	1800	0.800	28.14	1.49	0.060	26.2	L
AD9225B/R12ML-N(P/M)	12	0.40	4.80	2800	1.270	44.96	3.51	0.140	32.5	M
AD9225B/R12H-N(P/M)	12	0.61	7.20	4000	1.800	63.76	6.56	0.260	42.4	H
AD9225B/R24L-N(P/M)	24	0.15	3.60	1800	0.800	28.14	1.49	0.060	26.2	L
AD9225B/R24M-N(P/M)	24	0.30	7.20	2800	1.270	44.96	3.51	0.140	32.5	M
AD9225B/R24H-N(P/M)	24	0.80	19.20	4000	1.800	63.76	6.56	0.260	42.4	H
AD9225B/R48L-N(P/M)	48	0.12	5.76	1800	0.800	28.14	1.49	0.060	26.2	L
AD9225B/R48M-N(P/M)	48	0.21	10.08	2800	1.270	44.96	3.51	0.140	32.5	M
AD9225B/R48H-N(P/M)	48	0.45	21.60	4000	1.800	63.76	6.56	0.260	42.4	H

PERFORMANCE CURVES

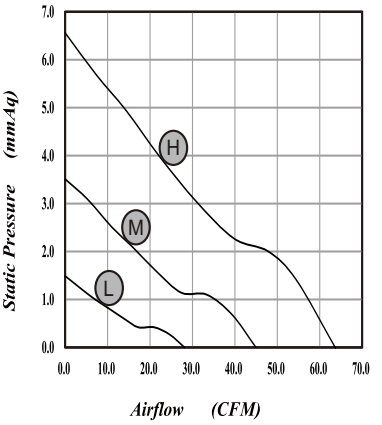

DIMENSIONS DRAWING

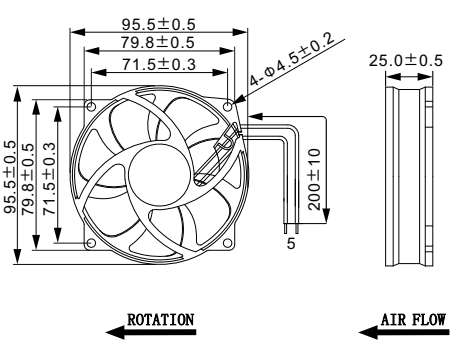

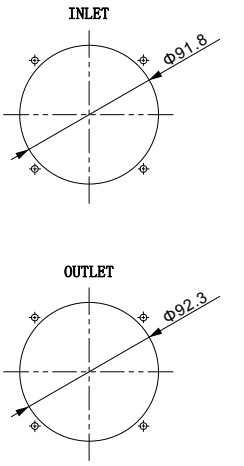

*Specifications are subject to change without notice

www.becoolfan.com

9215 Axial Series



Demensions: 92X92X15 mm

Bearing Type: FDB,Hydraulic,Ball Bearing

Function Type: FG/RD Signal,PWM pulse

Protection: Auto Restart Protection or General Options

SPECIFICATIONS

MODEL NO	VOLTAGE	CURRENT	POWER	SPEED	AIR FLOW		STATIC PRESSURE		NOISE	CURVE
	V	A	W	RPM	CMM	CFM	mmH2O	INH2O	(dBA)	
9215B/R12L-N(P/M)	12	0.10	1.20	1500	0.700	24.60	1.02	0.040	26.8	L
9215B/R12M-N(P/M)	12	0.25	3.00	2000	0.950	33.73	10.87	0.070	33.7	M
9215B/R12H-N(P/M)	12	0.45	5.40	2500	1.150	40.70	2.67	0.110	39.8	H

PERFORMANCE CURVES

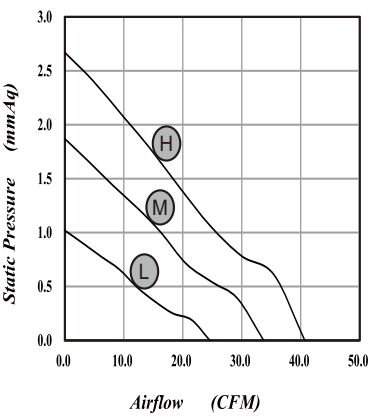

DIMENSIONS DRAWING

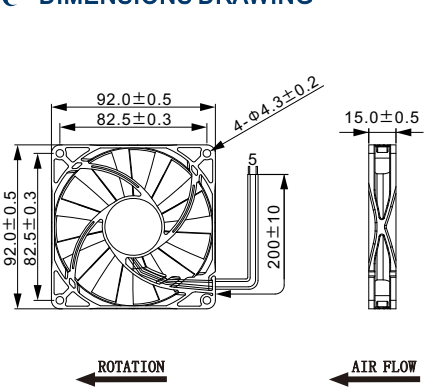

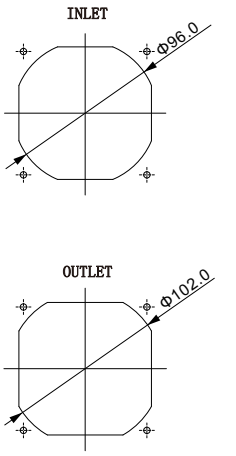

*Specifications are subject to change without notice

BeCool
www.becoolfan.com

9225 Axial Series

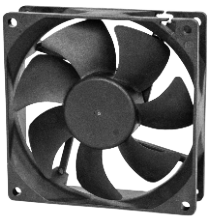

Demensions: 92X92X25 mm
Bearing Type: FDB,Hydraulic,Ball Bearing
Function Type: FG/RD Signal,PWM pulse
Protection: Auto Restart Protection or General Options

SPECIFICATIONS

MODEL NO	VOLTAGE	CURRENT	POWER	SPEED	AIR FLOW		STATIC PRESSURE		NOISE	CURVE
	V	A	W	RPM	CMM	CFM	mmH_2O	INH_2O	(dBA)	
AD9225B/R12L-N(P/M)	12	0.21	2.52	1800	0.805	28.43	1.35	0.053	26.7	L
AD9225B/R12ML-N(P/M)	12	0.40	4.80	2800	1.319	46.57	3.27	0.129	34.1	M
AD9225B/R12H-N(P/M)	12	0.61	7.20	4000	1.908	67.38	6.03	0.237	44.8	H
AD9225B12U-N(P/M)	12	1.20	14.40	6000	2.564	90.57	13.58	0.534	53.6	U
AD9225B/R24L-N(P/M)	24	0.15	3.60	1800	0.805	28.43	1.35	0.053	26.7	L
AD9225B/R24M-N(P/M)	24	0.30	7.20	2800	1.319	46.57	3.27	0.129	34.1	M
AD9225B/R24H-N(P/M)	24	0.80	19.20	4000	1.908	67.38	6.03	0.237	44.8	H
AD9225B24U-N(P/M)	24	0.75	18.00	6000	2.564	90.57	13.58	0.534	53.6	U
AD9225B/R48L-N(P/M)	48	0.12	5.76	1800	0.805	28.43	1.35	0.053	26.7	L
AD9225B/R48M-N(P/M)	48	0.21	10.08	2800	1.319	46.57	3.27	0.129	34.1	M
AD9225B/R48H-N(P/M)	48	0.45	21.60	4000	1.908	67.38	6.03	0.237	44.8	H
AD9225B48U-N(P/M)	48	0.50	24.00	6000	2.564	90.57	13.58	0.534	53.6	U

PERFORMANCE CURVES

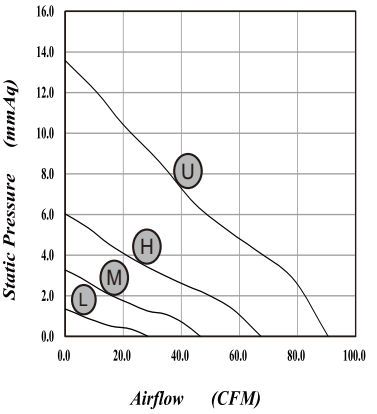

DIMENSIONS DRAWING

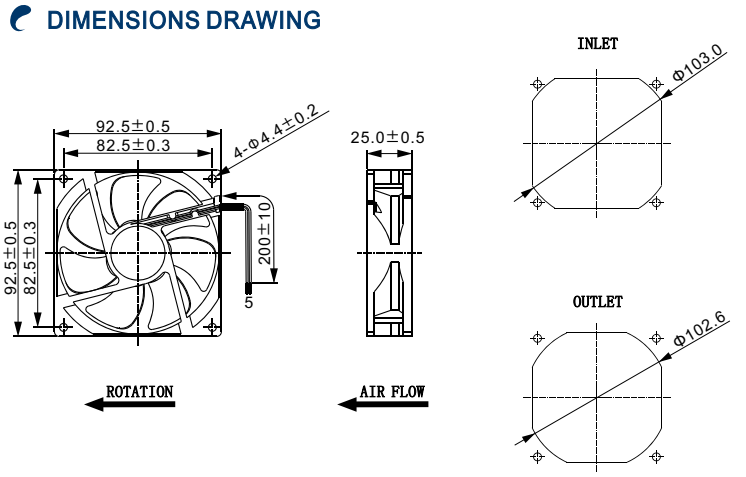

*Specifications are subject to change without notice

BeCool
www.becoolfan.com

9232 Axial Series



Demensions: 92X92X32 mm
Bearing Type: Ball Bearing
Function Type: FG/RD Signal,PWM pulse
Protection: Auto Restart Protection or General Options

SPECIFICATIONS

MODEL NO	VOLTAGE	CURRENT	POWER	SPEED	AIR FLOW		STATIC PRESSURE		NOISE	CURVE
	V	A	W	RPM	CMM	CFM	mmH_2O	INH_2O	(dBA)	
9232BVL-P(M)1	12	0.29	3.48	2500	1.370	48.37	4.19	0.165	34.8	L
9232BVM-P(M)1	12	0.80	9.60	3500	1.991	70.32	7.95	0.313	44.3	M
9232BVH-P(M)1	12	2.00	24.00	6500	3.747	132.34	30.30	1.192	59.2	H
9232BVL-P(M)2	24	0.15	3.60	2500	1.370	48.37	4.19	0.165	34.8	L
9232BVM-P(M)2	24	0.42	10.08	3500	1.991	70.32	7.95	0.313	44.3	M
9232BVH-P(M)2	24	1.10	26.40	6500	3.747	132.34	30.30	1.192	59.2	H
9232BVL-P(M)4	48	0.10	4.80	2500	1.370	48.37	4.19	0.165	34.8	L
9232BVM-P(M)4	48	0.20	9.60	3500	1.991	70.32	7.95	0.313	44.3	M
9232BVH-P(M)4	48	0.80	38.40	6500	3.747	132.34	30.30	1.192	59.2	H

PERFORMANCE CURVES

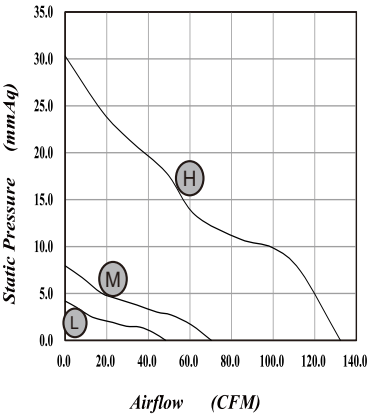

DIMENSIONS DRAWING

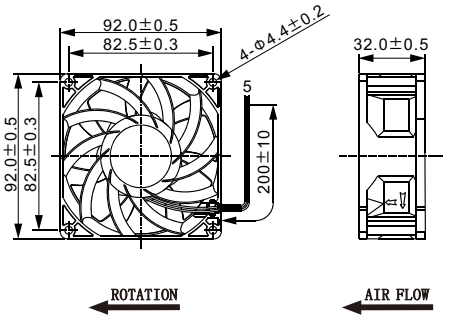

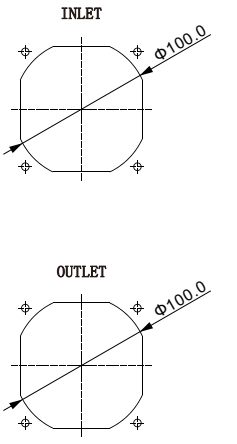

*Specifications are subject to change without notice

www.becoolfan.com

9238-1 Axial Series



Demensions: 92X92X38 mm

Bearing Type: Ball Bearing

Function Type: FG/RD Signal,PWM pulse

Protection: Auto Restart Protection or General Options

SPECIFICATIONS

MODEL NO	VOLTAGE	CURRENT	POWER	SPEED	AIR FLOW		STATIC PRESSURE		NOISE	CURVE
	V	A	W	RPM	CMM	CFM	mmH2O	INH2O	(dBA)	
9238BVL-N(P/M)1	12	0.40	4.80	3800	2.134	75.37	11.21	0.441	46.6	L
9238BVM-N(P/M)1	12	1.00	12.00	5000	2.981	105.30	19.03	0.749	53.9	M
9238BVH-N(P/M)1	12	2.20	26.40	6500	3.595	126.97	31.00	1.220	59.1	H
9238BVL-N(P/M)2	24	0.55	13.20	3800	2.134	75.37	11.21	0.441	46.6	L
9238BVM-N(P/M)2	24	1.20	28.80	5000	2.981	105.30	19.03	0.749	53.9	M
9238BVH-N(P/M)2	24	1.80	43.20	6500	3.595	126.97	31.00	1.220	59.1	H
9238BVL-N(P/M)4	48	0.30	14.40	3800	2.134	75.37	11.21	0.441	46.6	L
9238BVM-N(P/M)4	48	0.60	28.80	5000	2.981	105.30	19.03	0.749	53.9	M
9238BVH-N(P/M)4	48	0.80	38.40	6500	3.595	126.97	31.00	1.220	59.1	H

PERFORMANCE CURVES

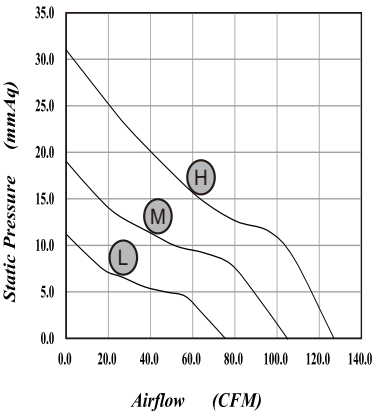

DIMENSIONS DRAWING

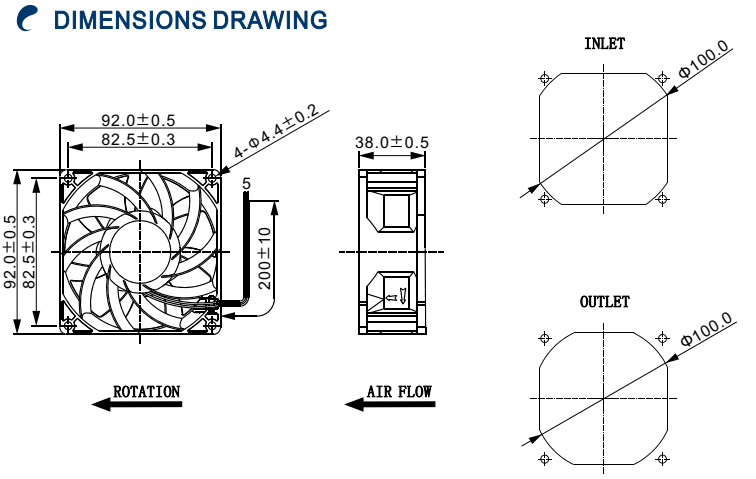

*Specifications are subject to change without notice

www.becoolfan.com

9238-2 Axial Series



Demensions: 92X92X38 mm

Bearing Type: Ball Bearing

Function Type: FG/RD Signal,PWM pulse

Protection: Auto Restart Protection or General Options

SPECIFICATIONS

MODEL NO	VOLTAGE	CURRENT	POWER	SPEED	AIR FLOW		STATIC PRESSURE		NOISE	CURVE
	V	A	W	RPM	CMM	CFM	mmH2O	INH2O	(dBA)	
9238BVL-N(P/M)1	12	0.40	4.80	3500	1.902	67.14	8.62	0.339	44.3	L
9238BVM-N(P/M)1	12	1.00	12.00	5000	2.753	97.18	16.39	0.645	54.2	M
9238BVH-N(P/M)1	12	2.20	26.40	7000	3.830	135.19	31.01	1.221	61.2	H
9238BVH-N(P/M)1	12	3.00	36.00	8500	4.741	167.44	44.15	1.738	67.8	U
9238BVL-N(P/M)2	24	0.55	13.20	3500	1.902	67.14	8.62	0.339	44.3	L
9238BVM-N(P/M)2	24	1.20	28.80	5000	2.753	97.18	16.39	0.645	54.2	M
9238BVH-N(P/M)2	24	1.80	43.20	7000	3.830	135.19	31.01	1.221	61.2	H
9238BVH-N(P/M)2	24	2.00	48.00	8500	4.741	167.44	44.15	1.738	67.8	U
9238BVL-N(P/M)4	48	0.30	14.40	3500	1.902	67.14	8.62	0.339	44.3	L
9238BVM-N(P/M)4	48	0.60	28.80	5000	2.753	97.18	16.39	0.645	54.2	M
9238BVH-N(P/M)4	48	1.00	48.00	7000	3.830	135.19	31.01	1.221	61.2	H
9238BVH-N(P/M)4	48	1.50	72.00	8500	4.741	167.44	44.15	1.738	67.8	U

PERFORMANCE CURVES

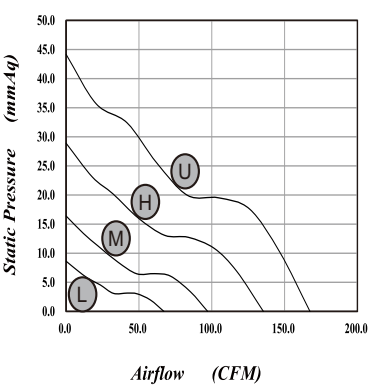

DIMENSIONS DRAWING

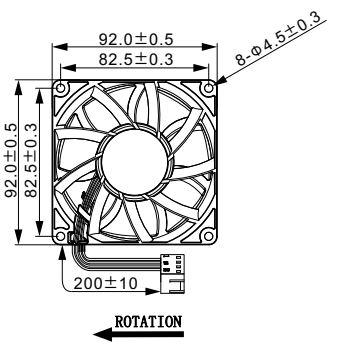

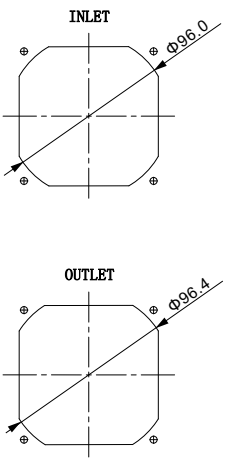

*Specifications are subject to change without notice

BeCool
www.becoolfan.com

12025-1 Axial Series



Demensions: 120X120X25 mm
Bearing Type: FDB,Hydraulic,Ball Bearing
Function Type: FG/RD Signal,PWM pulse
Protection: Auto Restart Protection or General Options

SPECIFICATIONS

MODEL NO	VOLTAGE	CURRENT	POWER	SPEED	AIR FLOW		STATIC PRESSURE		NOISE	CURVE
	V	A	W	RPM	CMM	CFM	mmH_2O	INH_2O	(dBA)	
AD12025B/R05L-N(P/M)	5	0.25	1.25	2000	1.730	61.07	2.44	0.096	37.9	L
AD12025B/R05M-N(P/M)	5	0.35	1.75	2400	2.194	77.46	3.65	0.144	42.6	M
AD12025B/R05H-N(P/M)	5	0.55	2.75	3200	2.837	100.16	5.62	0.221	51.6	H
AD12025B/R12L-N(P/M)	12	0.17	2.04	2000	1.730	61.07	2.44	0.096	37.9	L
AD12025B/R12M-N(P/M)	12	0.28	3.36	2400	2.194	77.46	3.65	0.144	42.6	M
AD12025B/R12H-N(P/M)	12	0.53	6.36	3200	2.837	100.16	5.62	0.221	51.6	H
AD12025B/R24L-N(P/M)	24	0.15	3.60	2000	1.730	61.07	2.44	0.096	37.9	L
AD12025B/R24M-N(P/M)	24	0.25	6.00	2400	2.194	77.46	3.65	0.144	42.6	M
AD12025B/R24H-N(P/M)	24	0.35	8.40	3200	2.837	100.16	5.62	0.221	51.6	H

PERFORMANCE CURVES

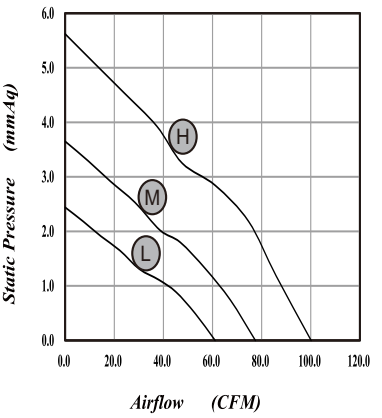

DIMENSIONS DRAWING

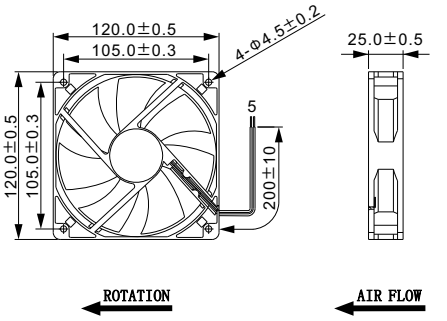

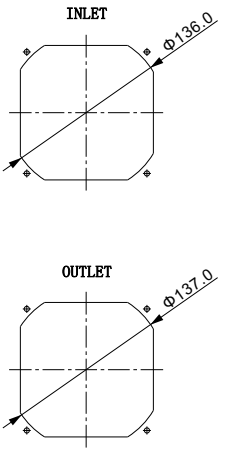

*Specifications are subject to change without notice

BeCool
www.becoolfan.com

12025-2 Axial Series

Demensions: 120X120X25 mm
Bearing Type: FDB,Hydraulic,Ball Bearing
Function Type: FG/RD Signal,PWM pulse
Protection: Auto Restart Protection or General Options



SPECIFICATIONS

MODEL NO	VOLTAGE	CURRENT	POWER	SPEED	AIR FLOW		STATIC PRESSURE		NOISE	CURVE
	V	A	W	RPM	CMM	CFM	mmH_2O	INH_2O	(dBA)	
AD1225B/R12L-N(P/M)	12	0.17	2.04	1500	1.662	58.70	1.49	0.059	31.9	L
AD1225B/R12M-N(P/M)	12	0.28	3.36	2000	2.082	73.52	2.25	0.089	39.6	M
AD1225B/R12H-N(P/M)	12	0.53	6.36	2400	2.572	90.84	2.85	0.112	44.8	H

PERFORMANCE CURVES

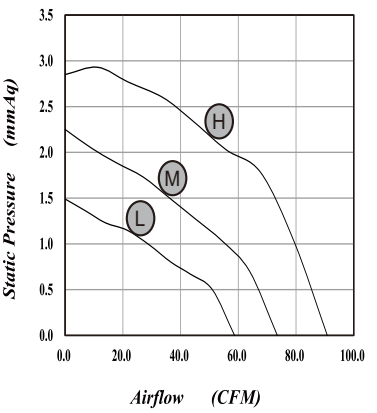

DIMENSIONS DRAWING

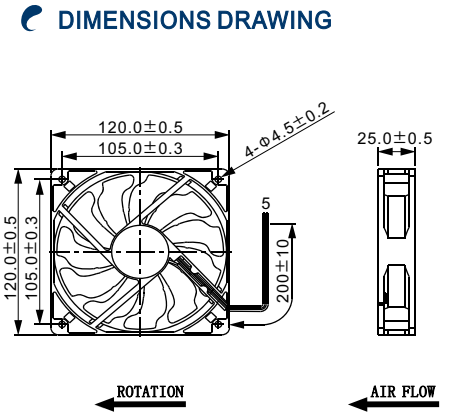

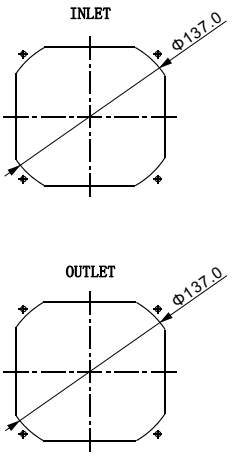

*Specifications are subject to change without notice

www.becoolfan.com

12025-3 Axial Series



Demensions: 120X120X25 mm

Bearing Type: Ball Bearing

Function Type: FG/RD Signal,PWM pulse

Protection: Auto Restart Protection or General Options

SPECIFICATIONS

MODEL NO	VOLTAGE	CURRENT	POWER	SPEED	AIR FLOW		STATIC PRESSURE		NOISE	CURVE
	V	A	W	RPM	CMM	CFM	mmH2O	INH2O	(dBA)	
AD1225B12L-N(P/M)	12	0.17	2.04	2000	1.625	57.38	3.70	0.146	35.5	L
AD1225B12M-N(P/M)	12	0.28	3.36	2800	2.290	80.84	7.12	0.280	45.4	M
AD1225B12H-N(P/M)	12	0.53	6.36	3500	2.953	104.25	11.04	0.435	50.5	H
AD1225B24L-N(P/M)	24	0.15	3.60	2000	1.625	57.38	3.70	0.146	35.5	L
AD1225B24M-N(P/M)	24	0.25	6.00	2800	2.290	80.84	7.12	0.280	45.4	M
AD1225B24H-N(P/M)	24	0.35	8.40	3500	2.953	104.25	11.04	0.435	50.5	H

PERFORMANCE CURVES

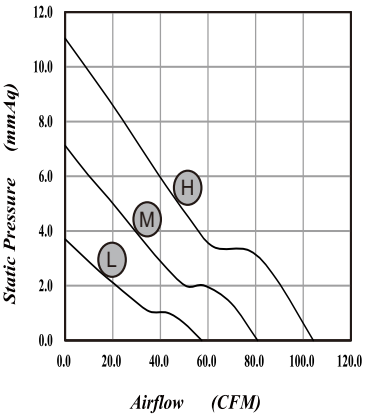

DIMENSIONS DRAWING

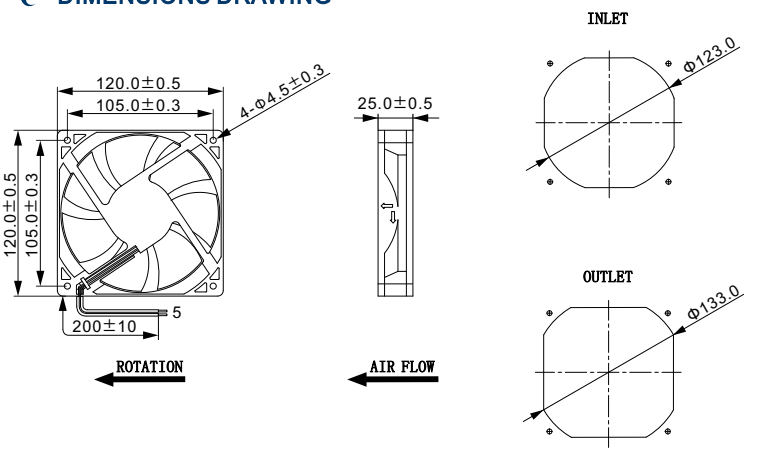

*Specifications are subject to change without notice

BeCool
www.becoolfan.com

12032 Axial Series



Demensions: 120X120X32 mm
Bearing Type: Ball Bearing
Function Type: FG/RD Signal,PWM pulse
Protection: Auto Restart Protection or General Options

SPECIFICATIONS

MODEL NO	VOLTAGE	CURRENT	POWER	SPEED	AIR FLOW		STATIC PRESSURE		NOISE	CURVE
	V	A	W	RPM	CMM	CFM	mmH2O	INH2O	(dBA)	
12032BVL-P(M)1	12	0.32	3.84	2000	2.550	90.04	4.27	0.168	42.0	L
12032BVM-P(M)1	12	0.80	9.60	3000	3.712	131.08	9.03	0.356	51.9	M
12032BVH-P(M)1	12	2.40	28.80	4000	4.940	174.46	15.24	0.600	58.7	H
12032BVL-P(M)2	24	0.25	6.00	2000	2.550	90.04	4.27	0.168	42.0	L
12032BVM-P(M)2	24	0.60	14.40	3000	3.712	131.08	9.03	0.356	51.9	M
12032BVH-P(M)2	24	1.00	24.00	4000	4.940	174.46	15.24	0.600	58.7	H
12032BVL-P(M)4	48	0.10	4.80	2000	2.550	90.04	4.27	0.168	42.0	L
12032BVM-P(M)4	48	0.26	12.48	3000	3.712	131.08	9.03	0.356	51.9	M
12032BVH-P(M)4	48	0.90	43.20	4000	4.940	174.46	15.24	0.600	58.7	H

PERFORMANCE CURVES

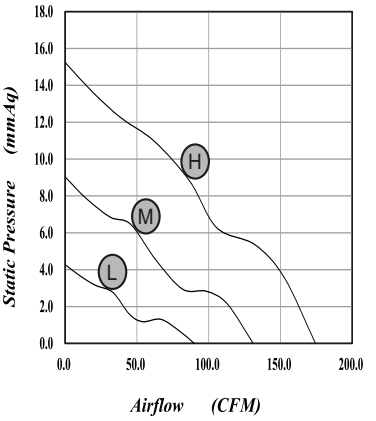

DIMENSIONS DRAWING

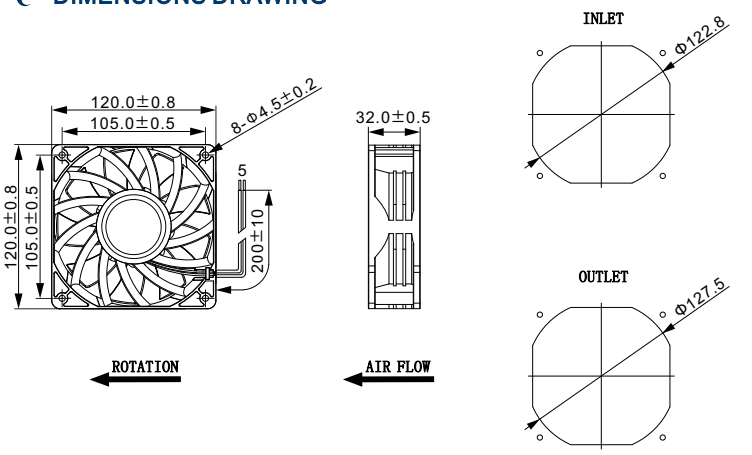

*Specifications are subject to change without notice

12038-1 Axial Series

Demensions: 120X120X38 mm
Bearing Type: Ball Bearing
Function Type: FG/RD Signal,PWM pulse
Protection: Auto Restart Protection or General Options



SPECIFICATIONS

MODEL NO	VOLTAGE	CURRENT	POWER	SPEED	AIR FLOW		STATIC PRESSURE		NOISE	CURVE
	V	A	W	RPM	CMM	CFM	mmH_2O	INH_2O	(dBA)	
12038BVL-N(P/M)1	12	0.75	9.00	2500	2.961	104.52	6.29	0.248	49.0	L
12038BVM-N(P/M)1	12	1.55	18.60	3500	4.171	147.24	11.86	0.467	56.3	M
12038BVH-N(P/M)1	12	2.55	30.60	5000	5.929	209.29	19.70	0.775	64.0	H
12038BVL-N(P/M)2	24	0.55	13.20	2500	2.961	104.52	6.29	0.248	49.0	L
12038BVM-N(P/M)2	24	0.80	19.20	3500	4.171	147.24	11.86	0.467	56.3	M
12038BVH-N(P/M)2	24	1.80	43.20	5000	5.929	209.29	19.70	0.775	64.0	H
12038BVL-N(P/M)4	48	0.30	14.40	2500	2.961	104.52	6.29	0.248	49.0	L
12038BVM-N(P/M)4	48	0.60	28.80	3500	4.171	147.24	11.86	0.467	56.3	M
12038BVH-N(P/M)4	48	1.20	57.60	5000	5.929	209.29	19.70	0.775	64.0	H

PERFORMANCE CURVES

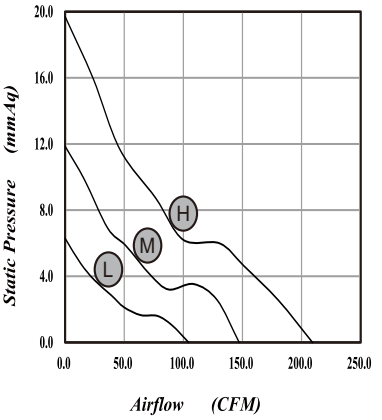

DIMENSIONS DRAWING

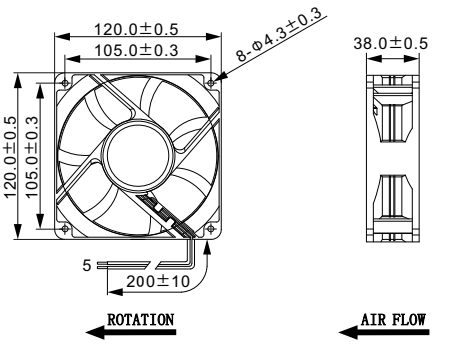

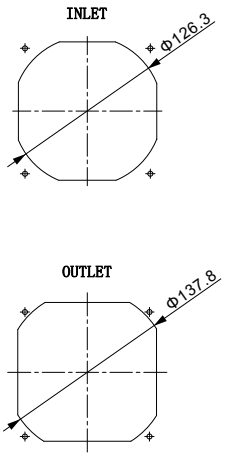

*Specifications are subject to change without notice

BeCool
www.becoolfan.com

12038-2 Axial Series



Demensions: 120X120X38 mm
Bearing Type: Ball Bearing
Function Type: FG/RD Signal,PWM pulse
Protection: Auto Restart Protection or General Options

SPECIFICATIONS

MODEL NO	VOLTAGE	CURRENT	POWER	SPEED	AIR FLOW		STATIC PRESSURE		NOISE	CURVE
	V	A	W	RPM	CMM	CFM	mmH_2O	INH_2O	(dBA)	
12038BVL-N(P/M)1	12	0.75	9.00	3500	3.064	108.16	11.75	0.463	51.8	L
12038BVM-N(P/M)1	12	1.55	18.60	5000	4.364	154.07	21.41	0.843	59.5	M
12038BVH-N(P/M)1	12	2.55	30.60	6300	6.000	211.82	32.31	1.272	66.7	H
12038BVL-N(P/M)2	24	0.55	13.20	3500	3.064	108.16	11.75	0.463	51.8	L
12038BVM-N(P/M)2	24	0.80	19.20	5000	4.364	154.07	21.41	0.843	59.5	M
12038BVH-N(P/M)2	24	1.80	43.20	6300	6.000	211.82	32.31	1.272	66.7	H
12038BVL-N(P/M)4	48	0.30	14.40	3500	3.064	108.16	11.75	0.463	51.8	L
12038BVM-N(P/M)4	48	0.60	28.80	5000	4.364	154.07	21.41	0.843	59.5	M
12038BVH-N(P/M)4	48	1.20	57.60	6300	6.000	211.82	32.31	1.272	66.7	H

PERFORMANCE CURVES

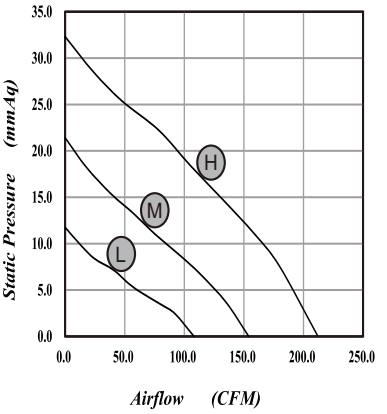

DIMENSIONS DRAWING

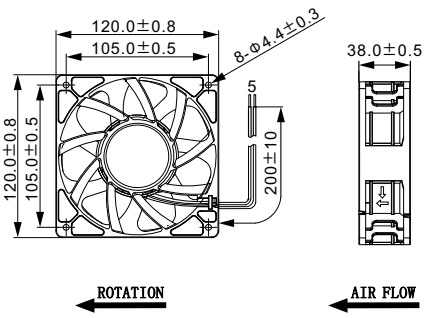

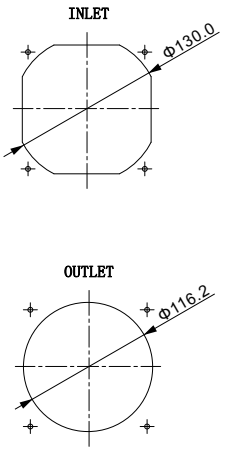

*Specifications are subject to change without notice

BeCool
www.becoolfan.com

12038-3 Axial Series

Demensions: 120X120X38 mm
Bearing Type: Ball Bearing
Function Type: FG/RD Signal,PWM pulse
Protection: Auto Restart Protection or General Options



SPECIFICATIONS

MODEL NO	VOLTAGE	CURRENT	POWER	SPEED	AIR FLOW		STATIC PRESSURE		NOISE	CURVE
	V	A	W	RPM	CMM	CFM	mmH2O	INH2O	(dBA)	
12038B/RVL-N(P/M)1	12	0.75	9.00	4000	3.543	125.08	15.71	0.618	52.4	L
12038B/RVM-N(P/M)1	12	1.55	18.60	6000	5.214	184.06	31.33	1.233	62.2	M
12038B/RVH-N(P/M)1	12	3.00	36.00	7700	6.450	227.79	50.33	1.981	68.3	H
12038B/RVL-N(P/M)2	24	0.55	13.20	4000	3.543	125.08	15.71	0.618	52.4	L
12038B/RVM-N(P/M)2	24	0.80	19.20	6000	5.214	184.06	31.33	1.233	62.2	M
12038B/RVH-N(P/M)2	24	1.80	43.20	7700	6.450	227.79	50.33	1.981	68.3	H
12038B/RVL-N(P/M)4	48	0.30	14.40	4000	3.543	125.08	15.71	0.618	52.4	L
12038B/RVM-N(P/M)4	48	0.60	28.80	6000	5.214	184.06	31.33	1.233	62.2	M
12038B/RVH-N(P/M)4	48	1.20	57.60	7700	6.450	227.79	50.33	1.981	68.3	H

PERFORMANCE CURVES

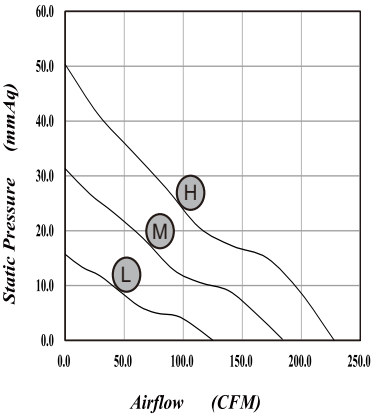

DIMENSIONS DRAWING

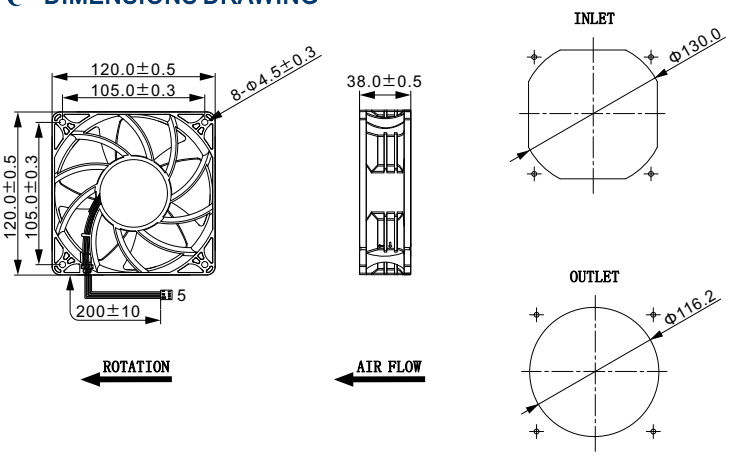

*Specifications are subject to change without notice

BeCool
www.becoolfan.com

14025 Axial Series



Demensions: 140X140X25 mm
Bearing Type: FDB,Hydraulic,Ball Bearing
Function Type: FG/RD Signal,PWM pulse
Protection: Auto Restart Protection or General Options

SPECIFICATIONS

MODEL NO	VOLTAGE	CURRENT	POWER	SPEED	AIR FLOW		STATIC PRESSURE		NOISE	CURVE
	V	A	W	RPM	CMM	CFM	mmH_2O	INH_2O	(dBA)	
14025B/RVL-N(P/M)5	5	0.17	0.85	1000	1.457	51.43	0.98	0.038	21.1	L
14025B/RVM-N(P/M)5	5	0.40	2.00	2000	2.756	97.30	2.91	0.115	37.3	M
14025B/RVH-N(P/M)5	5	0.75	3.75	2400	3.392	119.74	4.18	0.165	43.7	H
14025B/RVL-N(P/M)1	12	0.20	2.40	1000	1.457	51.43	0.98	0.038	21.1	L
14025B/RVM-N(P/M)1	12	0.32	3.84	2000	2.756	97.30	2.91	0.115	37.3	M
14025B/RVH-N(P/M)1	12	0.45	5.40	2400	3.392	119.74	4.18	0.165	43.7	H
14025B/RVU-N(P/M)1	12	0.80	9.60	3000	4.337	153.16	5.95	0.234	51.2	U

PERFORMANCE CURVES

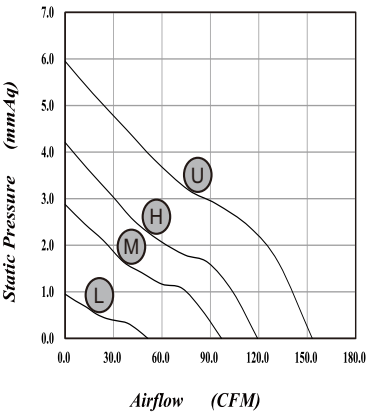

DIMENSIONS DRAWING

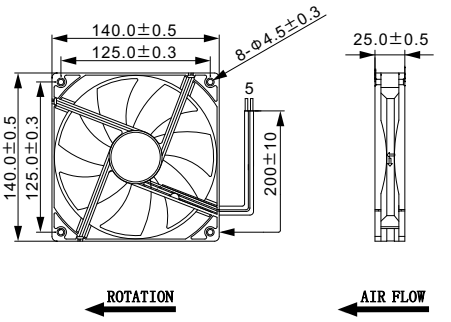

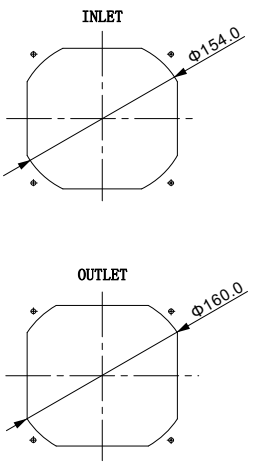

*Specifications are subject to change without notice

www.becoolfan.com

14038 Axial Series



Demensions: 140X140X38 mm

Bearing Type: Ball Bearing

Function Type: FG/RD Signal,PWM pulse

Protection: Auto Restart Protection or General Options

SPECIFICATIONS

MODEL NO	VOLTAGE	CURRENT	POWER	SPEED	AIR FLOW		STATIC PRESSURE		NOISE	CURVE
	V	A	W	RPM	CMM	CFM	mmH2O	INH2O	(dBA)	
14038BVL-N(P/M)1	12	0.80	9.60	2000	4.417	156.07	6.20	0.244	49.9	L
14038BVM-N(P/M)1	12	1.50	18.00	2500	5.346	188.89	9.19	0.362	55.3	M
14038BVH-N(P/M)1	12	2.00	24.00	3000	6.531	230.76	13.27	0.523	60.9	H
14038BVL-N(P/M)2	24	0.50	12.00	2000	4.417	156.07	6.20	0.244	49.9	L
14038BVM-N(P/M)2	24	1.00	24.00	2500	5.346	188.89	9.19	0.362	55.3	M
14038BVH-N(P/M)2	24	1.50	36.00	3000	6.531	230.76	13.27	0.523	60.9	H
14038BVL-N(P/M)4	48	0.40	19.20	2000	4.417	156.07	6.20	0.244	49.9	L
14038BVM-N(P/M)4	48	0.80	38.40	2500	5.346	188.89	9.19	0.362	55.3	M
14038BVH-N(P/M)4	48	1.20	57.60	3000	6.531	230.76	13.27	0.523	60.9	H

PERFORMANCE CURVES

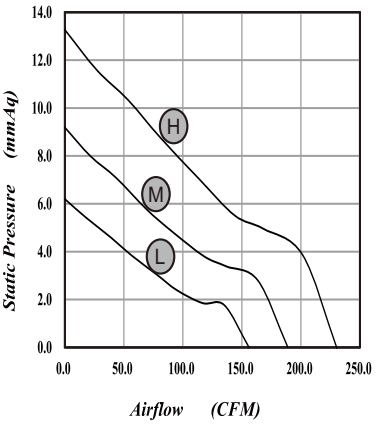

DIMENSIONS DRAWING

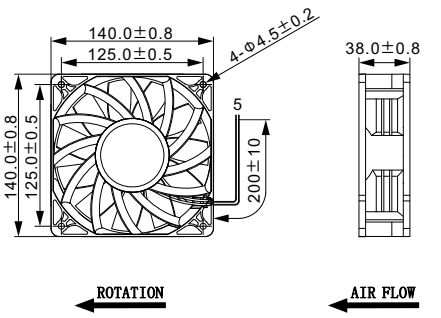

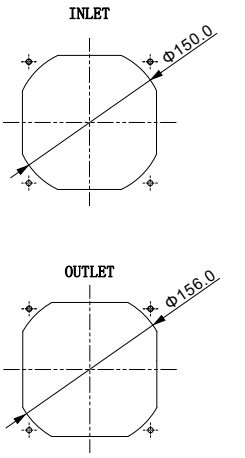

*Specifications are subject to change without notice

www.becoolfan.com

15050 Axial Series



Demensions: 150X150X50 mm

Bearing Type: Ball Bearing

Function Type: FG/RD Signal,PWM pulse

Protection: Auto Restart Protection or General Options

SPECIFICATIONS

MODEL NO	VOLTAGE	CURRENT	POWER	SPEED	AIR FLOW		STATIC PRESSURE		NOISE	CURVE
	V	A	W	RPM	CMM	CFM	mmH_2O	INH_2O	(dBA)	
15050BVL-N(P/M)1	12	1.50	18.00	2100	3.604	127.35	5.22	0.206	47.1	L
15050BVM-N(P/M)1	12	2.00	24.00	3100	5.998	211.96	17.56	0.692	58.1	M
15050BVH-N(P/M)1	12	3.00	36.00	4300	8.270	292.22	32.14	1.266	66.5	H
15050BVL-N(P/M)2	24	1.00	24.00	2100	3.604	127.35	5.22	0.206	47.1	L
15050BVM-N(P/M)2	24	1.70	40.80	3100	5.998	211.96	17.56	0.692	58.1	M
15050BVH-N(P/M)2	24	2.50	60.00	4300	8.270	292.22	32.14	1.266	66.5	H
15050BVL-N(P/M)4	48	0.55	26.40	2100	3.604	127.35	5.22	0.206	47.1	L
15050BVM-N(P/M)4	48	0.85	40.80	3100	5.998	211.96	17.56	0.692	58.1	M
15050BVH-N(P/M)4	48	1.20	57.60	4300	8.270	292.22	32.14	1.266	66.5	H

PERFORMANCE CURVES

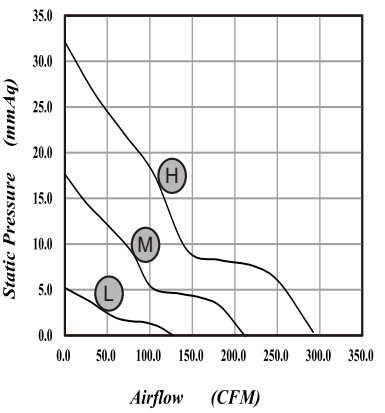

DIMENSIONS DRAWING

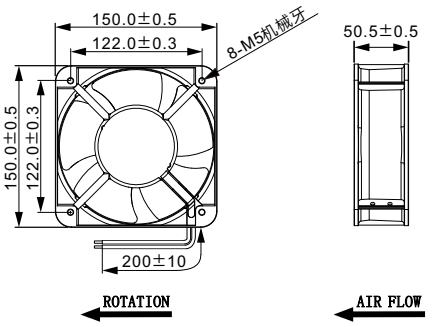

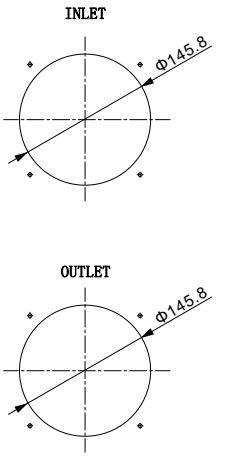

*Specifications are subject to change without notice

BeCool
www.becoolfan.com

17251-1 Axial Series

Demensions: 172X151X51 mm
Bearing Type: Ball Bearing
Function Type: FG/RD Signal,PWM pulse
Protection: Auto Restart Protection or General Options



SPECIFICATIONS

MODEL NO	VOLTAGE	CURRENT	POWER	SPEED	AIR FLOW		STATIC PRESSURE		NOISE	CURVE
	V	A	W	RPM	CMM	CFM	mmH_2O	INH_2O	(dBA)	
17251BVL-N(P/M)1	12	1.50	18.00	2100	3.604	127.35	5.22	0.206	47.1	L
17251BVM-N(P/M)1	12	2.00	24.00	3100	5.998	211.96	17.56	0.692	58.1	M
17251BVH-N(P/M)1	12	3.00	36.00	4300	8.270	292.22	32.14	1.266	66.5	H
17251BVL-N(P/M)2	24	1.00	24.00	2100	3.604	127.35	5.22	0.206	47.1	L
17251BVM-N(P/M)2	24	1.70	40.80	3100	5.998	211.96	17.56	0.692	58.1	M
17251BVH-N(P/M)2	24	2.50	60.00	4300	8.270	292.22	32.14	1.266	66.5	H
17251BVL-N(P/M)4	48	0.55	26.40	2100	3.604	127.35	5.22	0.206	47.1	L
17251BVM-N(P/M)4	48	0.85	40.80	3100	5.998	211.96	17.56	0.692	58.1	M
17251BVH-N(P/M)4	48	1.20	57.60	4300	8.270	292.22	32.14	1.266	66.5	H

PERFORMANCE CURVES

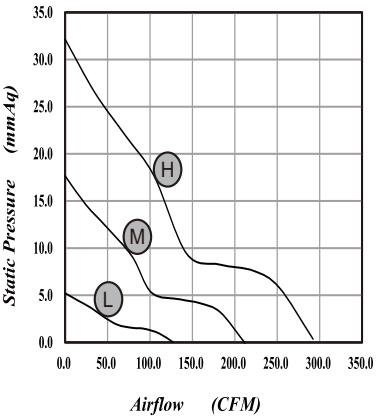

DIMENSIONS DRAWING

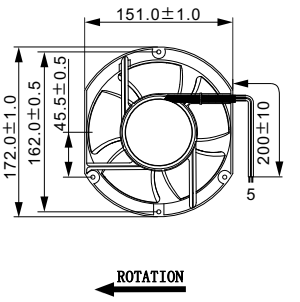

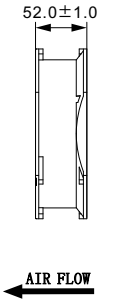

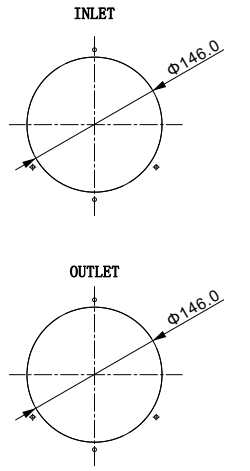

*Specifications are subject to change without notice

BeCool
www.becoolfan.com

17251-2 Axial Series



Demensions: 172X151X51 mm
Bearing Type: Ball Bearing
Function Type: FG/RD Signal,PWM pulse
Protection: Auto Restart Protection or General Options

SPECIFICATIONS

MODEL NO	VOLTAGE	CURRENT	POWER	SPEED	AIR FLOW		STATIC PRESSURE		NOISE	CURVE
	V	A	W	RPM	CMM	CFM	mmH_2O	INH_2O	(dBA)	
17251BVL-N(P/M)1	12	1.50	18.00	2000	3.964	140.01	6.38	0.251	46.9	L
17251BVM-N(P/M)1	12	2.00	24.00	4000	7.929	280.02	25.50	1.003	62.0	M
17251BVH-N(P/M)1	12	3.80	45.60	5500	10.902	385.03	48.21	1.898	69.0	H
17251BVL-N(P/M)2	24	1.00	24.00	2000	3.964	140.01	6.38	0.251	46.9	L
17251BVM-N(P/M)2	24	1.70	40.80	4000	7.929	280.02	25.50	1.003	62.0	M
17251BVH-N(P/M)2	24	2.50	60.00	5500	10.902	385.03	48.21	1.898	69.0	H
17251BVL-N(P/M)4	48	0.55	26.40	2000	3.964	140.01	6.38	0.251	46.9	L
17251BVM-N(P/M)4	48	0.85	40.80	4000	7.929	280.02	25.50	1.003	62.0	M
17251BVH-N(P/M)4	48	1.20	57.60	5500	10.902	385.03	48.21	1.898	69.0	H

PERFORMANCE CURVES

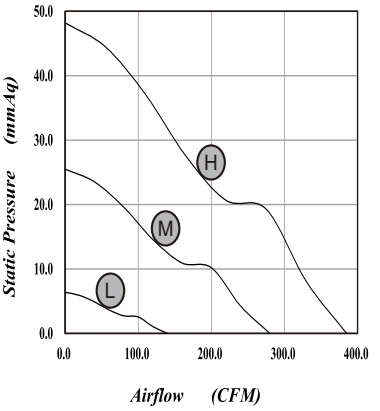

DIMENSIONS DRAWING

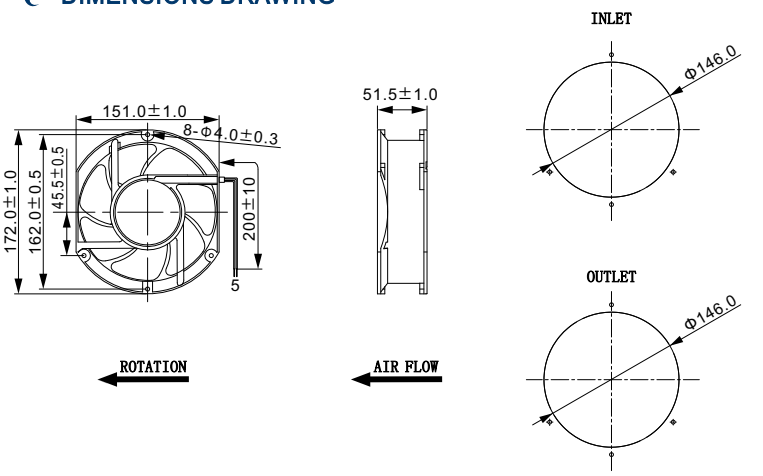

*Specifications are subject to change without notice

BeCool
www.becoolfan.com

18032 Axial Series



Demensions: 180X180X32 mm
Bearing Type: Ball Bearing
Function Type: FG/RD Signal,PWM pulse
Protection: Auto Restart Protection or General Options

SPECIFICATIONS

MODEL NO	VOLTAGE	CURRENT	POWER	SPEED	AIR FLOW		STATIC PRESSURE		NOISE	CURVE
	V	A	W	RPM	CMM	CFM	mmH_2O	INH_2O	(dBA)	
18032BVL-N(P/M)1	12	0.30	3.60	1000	2.263	79.88	1.62	0.064	28.5	L
18032BVM-N(P/M)1	12	0.50	6.00	1500	2.593	126.83	3.58	0.141	41.4	M
18032BVH-N(P/M)1	12	1.00	12.00	2100	5.020	177.20	6.63	0.261	50.1	H
18032BVL-N(P/M)2	24	0.15	3.60	1000	2.263	79.88	1.62	0.064	28.5	L
18032BVM-N(P/M)2	24	0.30	7.20	1500	2.593	126.83	3.58	0.141	41.4	M
18032BVH-N(P/M)2	24	0.50	12.00	2100	5.020	177.20	6.63	0.261	50.1	H

PERFORMANCE CURVES

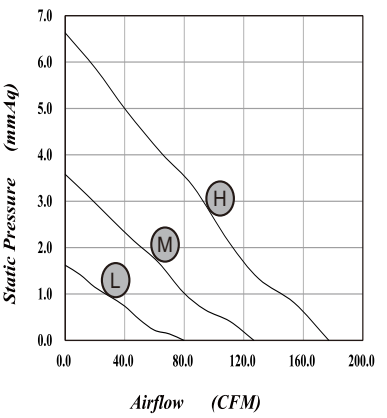

DIMENSIONS DRAWING

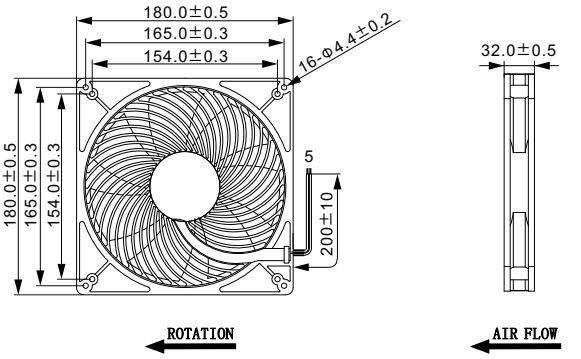

*Specifications are subject to change without notice

BeCool
www.becoolfan.com

3007 Triangle Fan Series

Demensions: 30X30X07 mm
Bearing Type: FDB,Hydraulic
Function Type: FG/RD Signal,PWM pulse
Protection: Auto Restart Protection or General Options



SPECIFICATIONS

MODEL NO	VOLTAGE	CURRENT	POWER	SPEED	AIR FLOW		STATIC PRESSURE		NOISE	CURVE
	V	A	W	RPM	CMM	CFM	mmH_2O	INH_2O	(dBA)	
3007RVL-N(P)5	5	0.13	0.65	6000	0.054	1.91	1.68	0.066	22.6	L
3007RVM-N(P)5	5	0.22	1.10	9000	0.085	3.03	3.66	0.144	28.1	M
3007RVH-N(P)5	5	0.35	1.75	12000	0.117	4.15	6.43	0.253	35.4	H
3007RVL-N(P)1	12	0.07	0.84	6000	0.054	1.91	1.68	0.066	22.6	L
3007RVM-N(P)1	12	0.11	1.32	9000	0.085	3.03	3.66	0.144	28.1	M
3007RVH-N(P)1	12	0.17	2.04	12000	0.117	4.15	6.43	0.253	35.4	H

PERFORMANCE CURVES

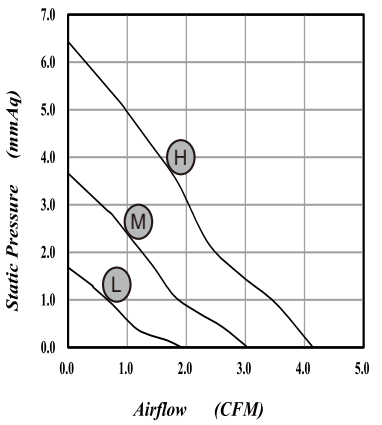

DIMENSIONS DRAWING

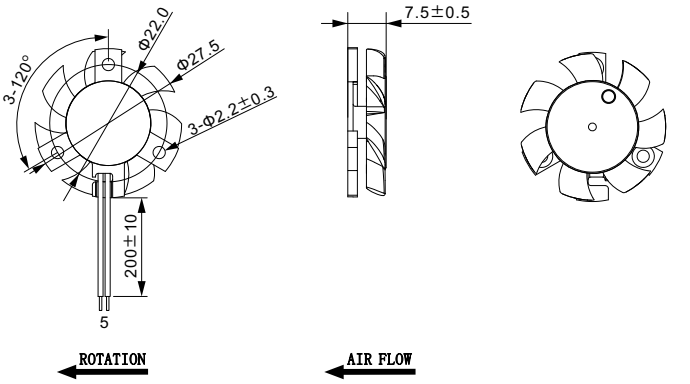

*Specifications are subject to change without notice

www.becoolfan.com

3010 Triangle Fan Series



Demensions: 30X30X10 mm

Bearing Type: FDB,Hydraulic,Ball Bearing

Function Type: FG/RD Signal,PWM pulse

Protection: Auto Restart Protection or General Options

SPECIFICATIONS

MODEL NO	VOLTAGE	CURRENT	POWER	SPEED	AIR FLOW		STATIC PRESSURE		NOISE	CURVE
	V	A	W	RPM	CMM	CFM	mmH_2O	INH_2O	(dBA)	
3010B/R05L-N(P/M)	5	0.18	0.90	6000	0.055	2.05	2.02	0.079	23.6	L
3010B/R05M-N(P/M)	5	0.25	1.25	10000	0.090	3.19	4.85	0.191	28.2	M
3010B/R05H-N(P/M)	5	0.32	1.00	15000	0.154	5.45	12.35	0.486	42.0	H
3010B/RVL-N(P/M) 1	12	0.13	1.56	6000	0.055	2.05	2.02	0.079	23.6	L
3010B/RVM-N(P/M) 1	12	0.20	2.40	10000	0.090	3.19	4.85	0.191	28.2	M
3010B/RVH-N(P/M) 1	12	0.32	3.84	15000	0.154	5.45	12.35	0.486	42.0	H

PERFORMANCE CURVES

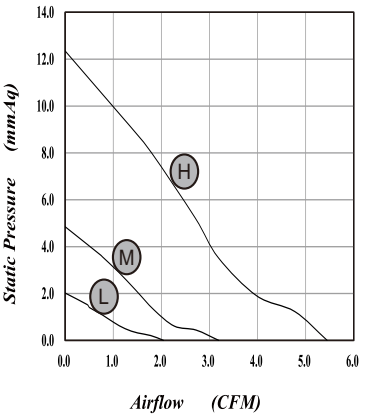

DIMENSIONS DRAWING

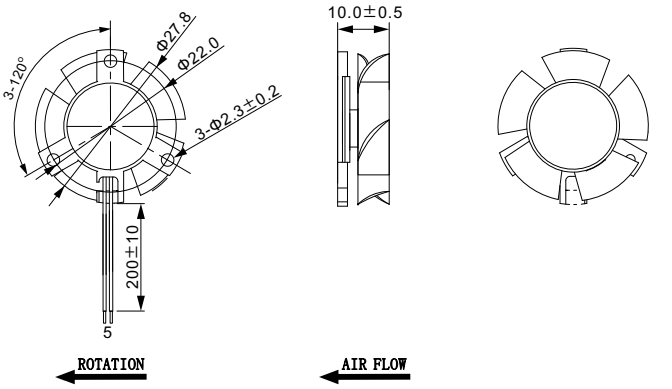

*Specifications are subject to change without notice

BeCool
www.becoolfan.com

3510 Triangle Fan Series

Demensions: 35X35X10 mm
Bearing Type: FDB,Hydraulic,Ball Bearing
Function Type: FG/RD Signal,PWM pulse
Protection: Auto Restart Protection or General Options



SPECIFICATIONS

MODEL NO	VOLTAGE	CURRENT	POWER	SPEED	AIR FLOW		STATIC PRESSURE		NOISE	CURVE
	V	A	W	RPM	CMM	CFM	mmH_2O	INH_2O	(dBA)	
3510B/RVL-N(P/M)5	5	0.14	0.70	6500	0.092	3.25	2.19	0.086	26.2	L
3510B/RVM-N(P/M)5	5	0.22	1.10	7500	0.109	3.86	2.96	0.117	29.1	M
3510B/RVH-N(P/M)5	5	0.35	1.75	9500	0.139	4.90	4.74	0.187	35.5	H
3510B/RVL-N(P/M)1	12	0.09	1.08	6500	0.092	3.25	2.19	0.086	26.2	L
3510B/RVM-N(P/M)1	12	0.18	2.16	7500	0.109	3.86	2.96	0.117	29.1	M
3510B/RVH-N(P/M)1	12	0.32	3.84	9500	0.139	4.90	4.74	0.187	35.5	H

PERFORMANCE CURVES

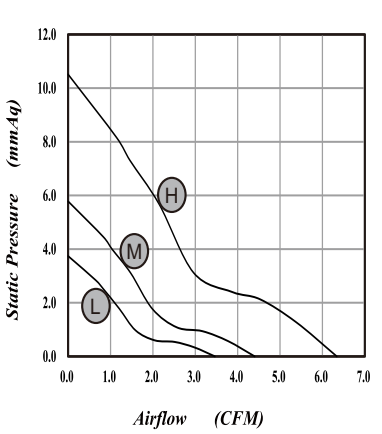

DIMENSIONS DRAWING

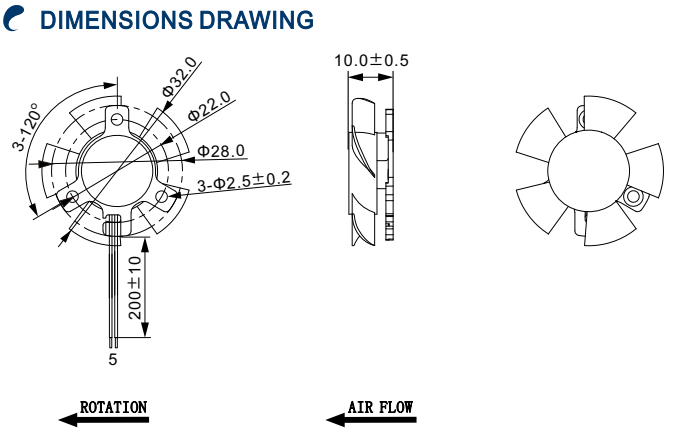

*Specifications are subject to change without notice

BeCool
www.becoolfan.com

4007 Triangle Fan Series

Demensions: 40X40X07 mm
Bearing Type: FDB,Hydraulic
Function Type: FG/RD Signal,PWM pulse
Protection: Auto Restart Protection or General Options



SPECIFICATIONS

MODEL NO	VOLTAGE	CURRENT	POWER	SPEED	AIR FLOW		STATIC PRESSURE		NOISE	CURVE
	V	A	W	RPM	CMM	CFM	mmH_2O	INH_2O	(dBA)	
4007RVL-N(P)5	5	0.15	0.75	3000	0.081	2.87	0.54	0.021	23.9	L
4007RVM-N(P)5	5	0.20	1.00	4000	0.113	4.01	0.99	0.039	24.5	M
4007RVH-N(P)5	5	0.30	1.50	5500	0.158	5.60	1.75	0.069	29.8	H
4007RVL-N(P)1	12	0.10	1.20	3000	0.081	2.87	0.54	0.021	23.9	L
4007RVM-N(P)1	12	0.15	1.80	4000	0.113	4.01	0.99	0.039	24.5	M
4007RVH-N(P)1	12	0.25	3.00	5500	0.158	5.60	1.75	0.069	29.8	H

PERFORMANCE CURVES

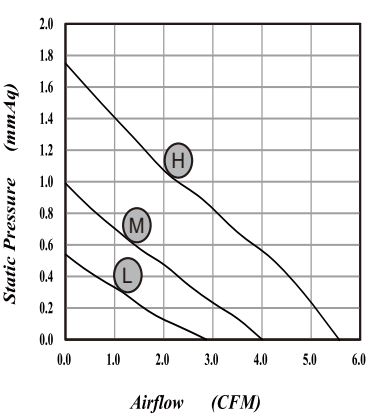

DIMENSIONS DRAWING

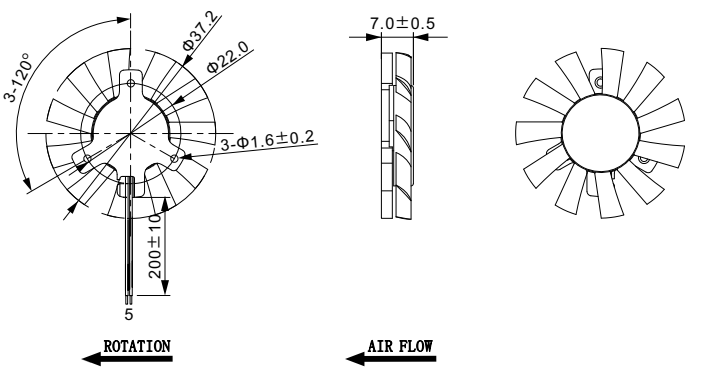

*Specifications are subject to change without notice

BeCool
www.becoolfan.com

4010 Triangle Fan Series



Demensions: 40X40X10 mm

Bearing Type: FDB,Hydraulic,Ball Bearing

Function Type: FG/RD Signal,PWM pulse

Protection: Auto Restart Protection or General Options

SPECIFICATIONS

MODEL NO	VOLTAGE	CURRENT	POWER	SPEED	AIR FLOW		STATIC PRESSURE		NOISE	CURVE
	V	A	W	RPM	CMM	CFM	mmH_2O	INH_2O	(dBA)	
AD4010B/R05L-N(P/M)	5	0.20	1.00	4000	0.148	5.26	1.79	0.070	25.3	L
AD4010B/R05M-N(P/M)	5	0.35	1.75	6000	0.237	8.40	4.33	0.170	31.8	M
AD4010B/R05H-N(P/M)	5	0.45	2.25	8000	0.318	11.26	8.28	0.326	40.1	H
4010B/RVL-N(P/M)1	12	0.13	1.56	4000	0.148	5.26	1.79	0.070	25.3	L
4010B/RVM-N(P/M)1	12	0.22	2.64	6000	0.237	8.40	4.33	0.170	31.8	M
4010B/RVH-N(P/M)1	12	0.35	4.20	8000	0.318	11.26	8.28	0.326	40.1	H
4010B/RVL-N(P/M)2	24	0.10	2.40	4000	0.148	5.26	1.79	0.070	25.3	L
4010B/RVM-N(P/M)2	24	0.18	4.32	6000	0.237	8.40	4.33	0.170	31.8	M
4010B/RVH-N(P/M)2	24	0.25	6.00	8000	0.318	11.26	8.28	0.326	40.1	H

PERFORMANCE CURVES

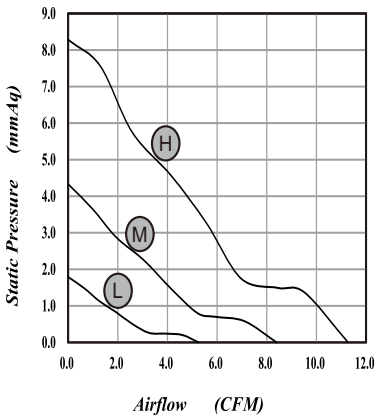

DIMENSIONS DRAWING

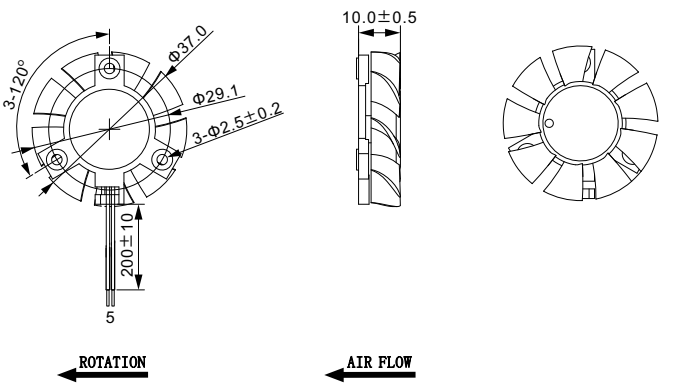

*Specifications are subject to change without notice

BeCool
www.becoolfan.com

5008 Triangle Fan Series



Demensions: 50X50X08 mm
Bearing Type: FDB,Hydraulic
Function Type: FG/RD Signal,PWM pulse
Protection: Auto Restart Protection or General Options

SPECIFICATIONS

MODEL NO	VOLTAGE	CURRENT	POWER	SPEED	AIR FLOW		STATIC PRESSURE		NOISE	CURVE
	V	A	W	RPM	CMM	CFM	mmH_2O	INH_2O	(dBA)	
5008RVL-N(P/M)5	5	0.20	1.00	2500	0.057	2.00	2.58	0.102	17.0	L
5008RVM-N(P/M)5	5	0.35	1.75	3500	0.078	2.75	5.05	0.199	25.4	M
5008RVH-N(P/M)5	5	0.65	3.25	4800	0.105	3.72	10.61	0.418	33.4	H
5008RVL-N(P/M)1	12	0.12	1.44	2500	0.057	2.00	2.58	0.102	17.0	L
5008RVM-N(P/M)1	12	0.25	3.00	3500	0.078	2.75	5.05	0.199	25.4	M
5008RVH-N(P/M)1	12	0.40	4.80	4800	0.105	3.72	10.61	0.418	33.4	H

PERFORMANCE CURVES

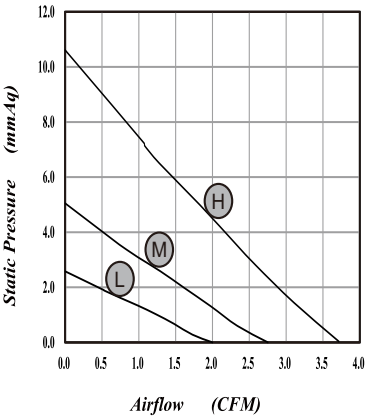

DIMENSIONS DRAWING

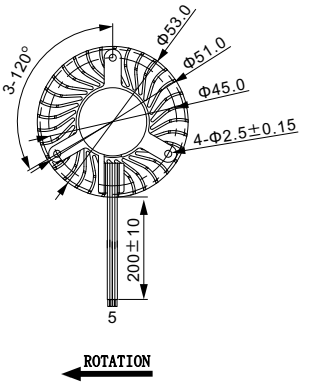

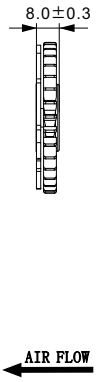

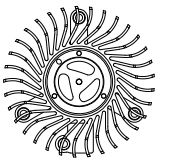

*Specifications are subject to change without notice

BeCool
www.becoolfan.com

5010 Triangle Fan Series

Demensions: 50X50X10 mm
Bearing Type: Hydraulic,Ball Bearing
Function Type: FG/RD Signal,PWM pulse
Protection: Auto Restart Protection or General Options



SPECIFICATIONS

MODEL NO	VOLTAGE	CURRENT	POWER	SPEED	AIR FLOW		STATIC PRESSURE		NOISE	CURVE
	V	A	W	RPM	CMM	CFM	mmH_2O	INH_2O	(dBA)	
5010B/RVL-N(P/M)5	5	0.25	1.25	3400	0.163	5.79	1.18	0.046	27.6	L
5010B/RVM-N(P/M)5	5	0.35	1.75	4200	0.205	7.27	1.71	0.067	29.2	M
5010B/RVH-N(P/M)5	5	0.45	2.25	5000	0.250	8.86	2.39	0.094	32.0	H
5010B/RVL-N(P/M)1	12	0.16	1.92	3400	0.163	5.79	1.18	0.046	27.6	L
5010B/RVM-N(P/M)1	12	0.25	3.00	4200	0.205	7.27	1.71	0.067	29.2	M
5010B/RVH-N(P/M)1	12	0.35	4.20	5000	0.250	8.86	2.39	0.094	32.0	H

PERFORMANCE CURVES

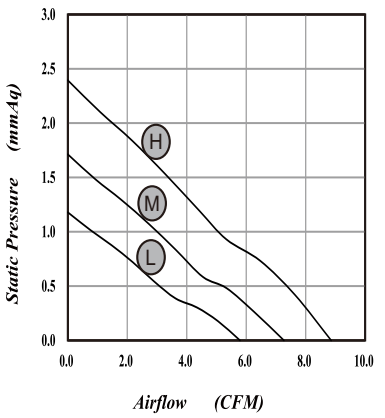

DIMENSIONS DRAWING

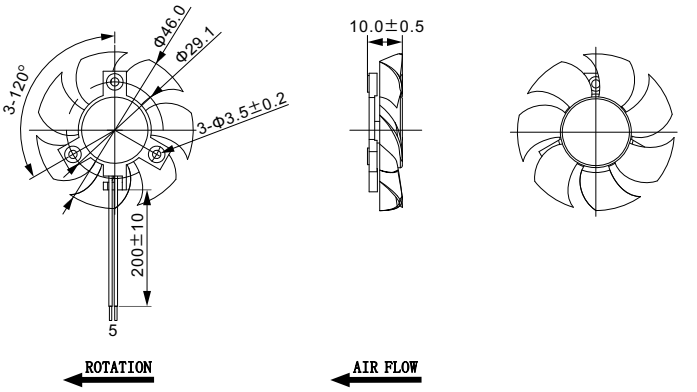

*Specifications are subject to change without notice

BeCool
www.becoolfan.com

6008 Triangle Fan Series

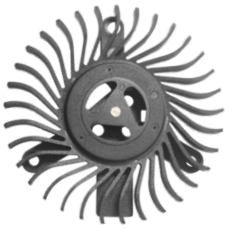

Demensions: 60X60X08 mm
Bearing Type: FDB,Hydraulic,Ball Bearing
Function Type: FG/RD Signal,PWM pulse
Protection: Auto Restart Protection or General Options

SPECIFICATIONS

MODEL NO	VOLTAGE	CURRENT	POWER	SPEED	AIR FLOW		STATIC PRESSURE		NOISE	CURVE
	V	A	W	RPM	CMM	CFM	mmH_2O	INH_2O	(dBA)	
6008RVL-N(P/M)5	5	0.20	1.00	2000	0.075	2.63	3.21	0.126	14.8	L
6008RVM-N(P/M)5	5	0.35	1.75	2500	0.091	3.20	4.80	0.189	18.4	M
6008RVH-N(P/M)5	5	0.65	3.25	3500	0.131	4.61	11.12	0.438	28.6	H
6008RVL-N(P/M)1	12	0.12	1.44	2000	0.075	2.63	3.21	0.126	14.8	L
6008RVM-N(P/M)1	12	0.25	3.00	2500	0.091	3.20	4.80	0.189	18.4	M
6008RVH-N(P/M)1	12	0.40	4.80	3500	0.131	4.61	11.12	0.438	28.6	H

PERFORMANCE CURVES

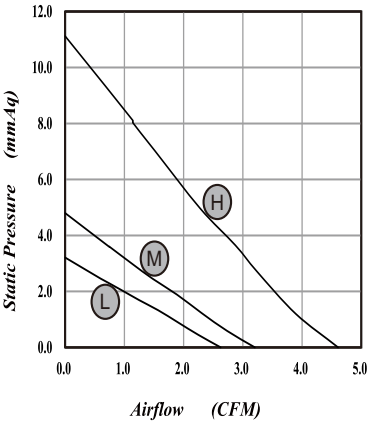

DIMENSIONS DRAWING

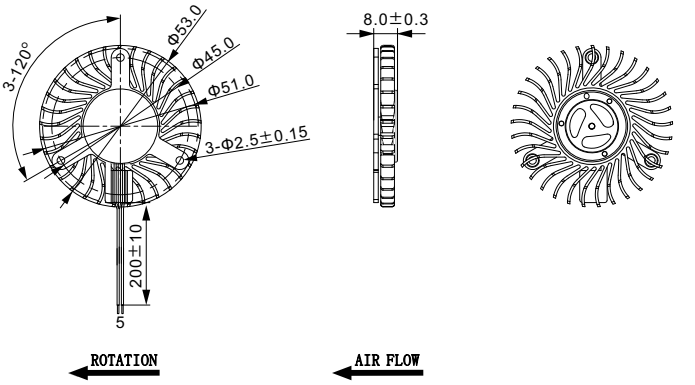

*Specifications are subject to change without notice

BeCool
www.becoolfan.com

6010 Triangle Fan Series

Demensions: 60X60X10 mm
Bearing Type: FDB,Hydraulic,Ball Bearing
Function Type: FG/RD Signal,PWM pulse
Protection: Auto Restart Protection or General Options



SPECIFICATIONS

MODEL NO	VOLTAGE	CURRENT	POWER	SPEED	AIR FLOW		STATIC PRESSURE		NOISE	CURVE
	V	A	W	RPM	CMM	CFM	mmH_2O	INH_2O	(dBA)	
6010B/RVL-N(P/M)5	5	0.12	0.60	3000	0.330	11.65	1.36	0.053	23.4	L
6010B/RVM-N(P/M)5	5	0.22	1.10	4200	0.472	16.66	2.63	0.104	33.0	M
6010B/RVH-N(P/M)5	5	0.45	2.25	5400	0.615	21.70	4.24	0.167	40.3	H
6010B/RVL-N(P/M)1	12	0.11	1.32	3000	0.330	11.65	1.36	0.053	23.4	L
6010B/RVM-N(P/M)1	12	0.20	2.40	4200	0.472	16.66	2.63	0.104	33.0	M
6010B/RVH-N(P/M)1	12	0.45	5.40	5400	0.615	21.70	4.24	0.167	40.3	H

PERFORMANCE CURVES

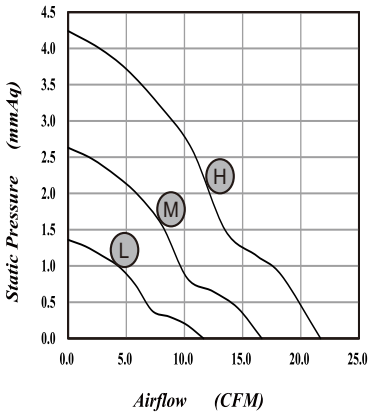

DIMENSIONS DRAWING

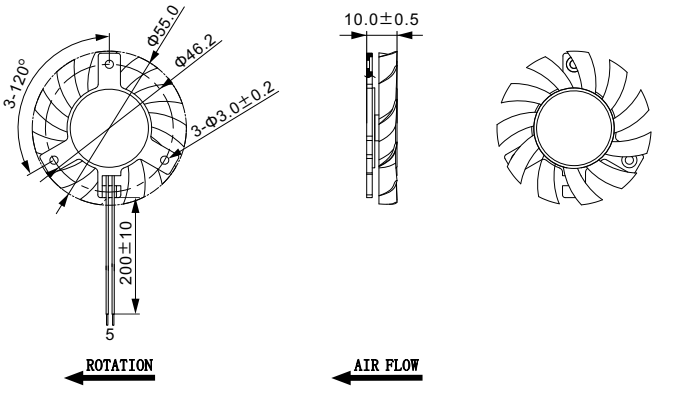

*Specifications are subject to change without notice

BeCool
www.becoolfan.com

6015 Triangle Fan Series



Demensions: 60X60X15 mm
Bearing Type: Hydraulic,Ball Bearing
Function Type: FG/RD Signal,PWM pulse
Protection: Auto Restart Protection or General Options

SPECIFICATIONS

MODEL NO	VOLTAGE	CURRENT	POWER	SPEED	AIR FLOW		STATIC PRESSURE		NOISE	CURVE
	V	A	W	RPM	CMM	CFM	mmH_2O	INH_2O	(dBA)	
6015B/RVL-N(P/M)5	5	0.25	1.25	4000	0.437	15.44	3.32	0.131	32.1	L
6015B/RVM-N(P/M)5	5	0.35	1.75	5000	0.552	19.52	5.06	0.199	36.6	M
6015B/RVH-N(P/M)5	5	0.50	2.50	6000	0.667	23.57	6.34	0.250	41.7	H
6015B/RVL-N(P/M)1	12	0.22	2.64	4000	0.437	15.44	3.32	0.131	32.1	L
6015B/RVM-N(P/M)1	12	0.33	3.96	5000	0.552	19.52	5.06	0.199	36.6	M
6015B/RVH-N(P/M)1	12	0.45	5.40	6000	0.667	23.57	6.34	0.250	41.7	H

PERFORMANCE CURVES

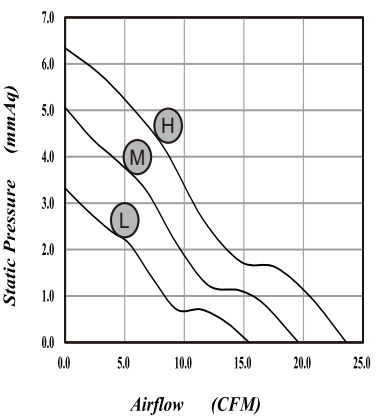

DIMENSIONS DRAWING

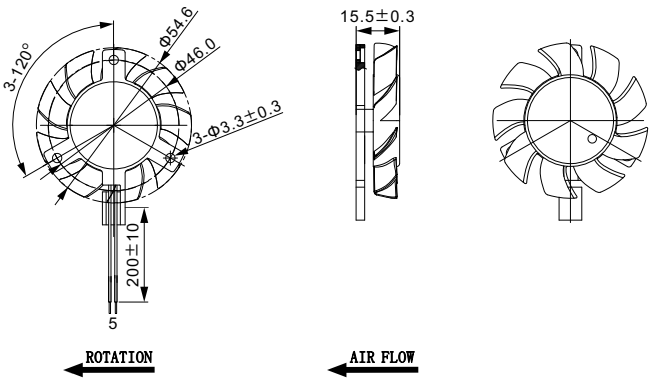

*Specifications are subject to change without notice

BeCool
www.becoolfan.com

6025 Triangle Fan Series

Demensions: 60X60X25 mm
Bearing Type: Ball Bearing
Function Type: FG/RD Signal,PWM pulse
Protection: Auto Restart Protection or General Options



SPECIFICATIONS

MODEL NO	VOLTAGE	CURRENT	POWER	SPEED	AIR FLOW		STATIC PRESSURE		NOISE	CURVE
	V	A	W	RPM	CMM	CFM	mmH_2O	INH_2O	(dBA)	
6025B/RVL-N(P/M)1	12	0.55	6.60	5000	0.673	23.84	8.12	0.320	43.5	H
6025B/RVM-N(P/M)1	12	1.30	15.60	8000	1.163	41.09	19.48	0.768	56.6	U
6025B/RVH-N(P/M)1	12	2.00	24.00	10500	1.488	52.53	32.85	1.293	63.0	E
6025B/RVL-N(P/M)2	24	0.35	8.40	5000	0.673	23.84	8.12	0.320	43.5	H
6025B/RVM-N(P/M)2	24	1.00	24.00	8000	1.163	41.09	19.48	0.768	56.6	U
6025B/RVH-N(P/M)2	24	1.60	38.40	10500	1.488	52.53	32.85	1.293	63.0	E

PERFORMANCE CURVES

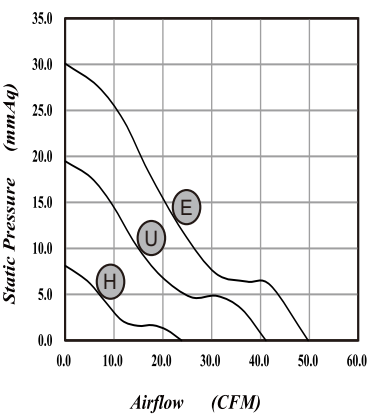

DIMENSIONS DRAWING

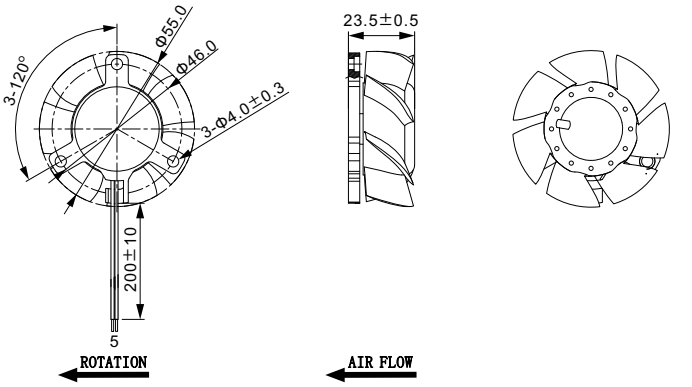

*Specifications are subject to change without notice

BeCool
www.becoolfan.com

7010 Triangle Fan Series

Demensions: 70X70X10 mm
Bearing Type: FDB,Hydraulic,Ball Bearing
Function Type: FG/RD Signal,PWM pulse
Protection: Auto Restart Protection or General Options



SPECIFICATIONS

MODEL NO	VOLTAGE	CURRENT	POWER	SPEED	AIR FLOW		STATIC PRESSURE		NOISE	CURVE
	V	A	W	RPM	CMM	CFM	mmH_2O	INH_2O	(dBA)	
7010B/RVL-N(P/M)1	12	0.12	1.44	2500	0.372	13.13	1.06	0.042	25.0	L
7010B/RVM-N(P/M)1	12	0.28	3.36	3100	0.459	16.21	1.55	0.061	30.8	M
7010B/RVH-N(P/M)1	12	0.45	5.40	4300	0.639	22.56	2.91	0.115	40.5	H
7010B/RVL-N(P/M)2	24	0.10	2.40	2500	0.372	13.13	1.06	0.042	25.0	L
7010B/RVM-N(P/M)2	24	0.20	4.80	3100	0.459	16.21	1.55	0.061	30.8	M
7010B/RVH-N(P/M)2	24	0.38	9.12	4300	0.639	22.56	2.91	0.115	40.5	H

PERFORMANCE CURVES

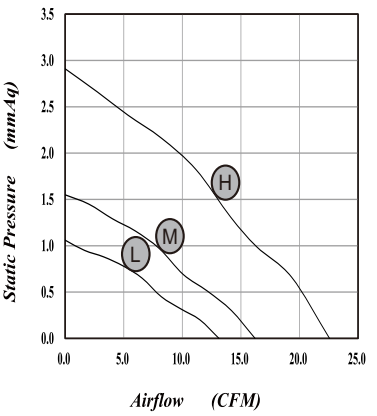

DIMENSIONS DRAWING

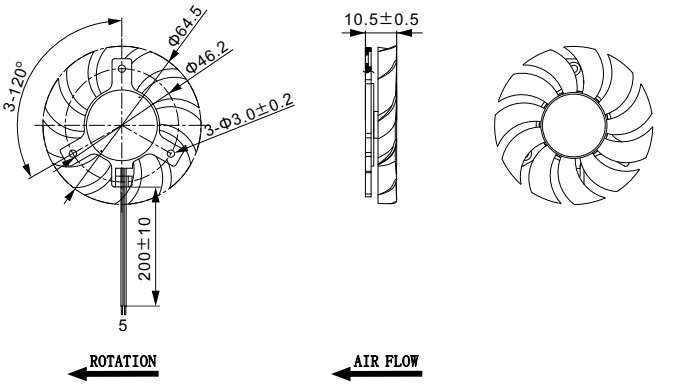

*Specifications are subject to change without notice

BeCool
www.becoolfan.com

7015 Triangle Fan Series

Demensions: 70X70X15 mm
Bearing Type: FDB,Hydraulic,Ball Bearing
Function Type: FG/RD Signal,PWM pulse
Protection: Auto Restart Protection or General Options



SPECIFICATIONS

MODEL NO	VOLTAGE	CURRENT	POWER	SPEED	AIR FLOW		STATIC PRESSURE		NOISE	CURVE
	V	A	W	RPM	CMM	CFM	mmH_2O	INH_2O	(dBA)	
7015B/RVL-N(P/M)1	12	0.24	2.88	2600	0.458	16.18	1.62	0.064	25.0	L
7015B/RVM-N(P/M)1	12	0.35	4.20	3800	0.695	24.53	3.42	0.135	33.3	M
7015B/RVH-N(P/M)1	12	0.55	6.60	6000	1.206	42.61	8.43	0.331	49.0	H
7015B/RVL-N(P/M)2	24	0.12	2.88	2600	0.458	16.18	1.62	0.064	25.0	L
7015B/RVM-N(P/M)2	24	0.22	5.28	3800	0.695	24.53	3.42	0.135	33.3	M
7015B/RVH-N(P/M)2	24	0.40	9.60	6000	1.206	42.61	8.43	0.331	49.0	H

PERFORMANCE CURVES

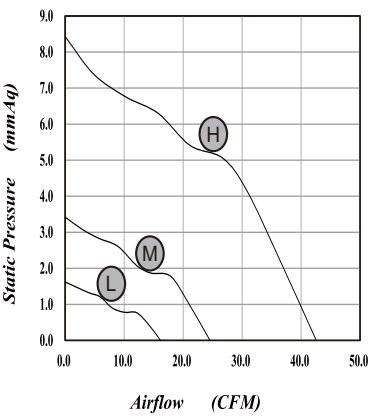

DIMENSIONS DRAWING

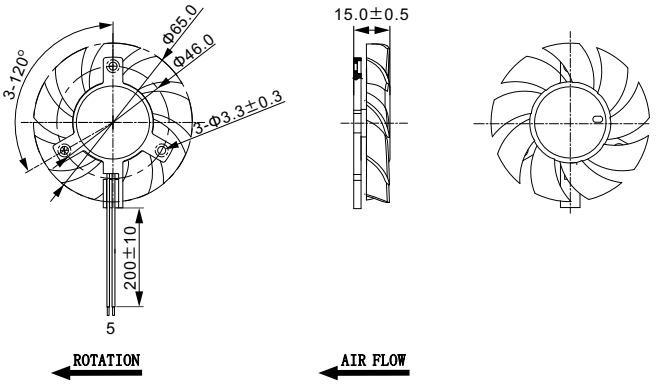

*Specifications are subject to change without notice

BeCool
www.becoolfan.com

7025 Triangle Fan Series



Demensions: 70X70X25 mm
Bearing Type: FDB,Hydraulic,Ball Bearing
Function Type: FG/RD Signal,PWM pulse
Protection: Auto Restart Protection or General Options

SPECIFICATIONS

MODEL NO	VOLTAGE	CURRENT	POWER	SPEED	AIR FLOW		STATIC PRESSURE		NOISE	CURVE
	V	A	W	RPM	CMM	CFM	mmH_2O	INH_2O	(dBA)	
7025B/RVL-N(P/M)1	12	0.25	3.00	3000	0.736	27.05	4.39	0.172	31.4	L
7025B/RVM-N(P/M)1	12	0.35	4.20	4500	1.081	38.18	6.91	0.272	40.2	M
7025B/RVH-N(P/M)1	12	0.55	6.60	6000	1.406	49.68	13.39	0.527	46.4	H
7025B/RVL-N(P/M)2	24	0.10	2.40	3000	0.736	27.05	4.39	0.172	31.4	L
7025B/RVM-N(P/M)2	24	0.20	4.80	4500	1.081	38.18	6.91	0.272	40.2	M
7025B/RVH-N(P/M)2	24	0.32	7.68	6000	1.406	49.68	13.39	0.527	46.4	H

PERFORMANCE CURVES

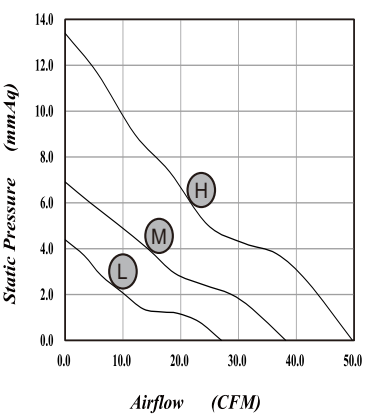

DIMENSIONS DRAWING

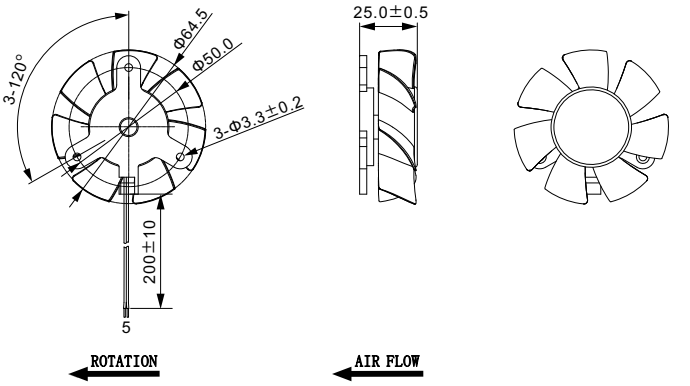

*Specifications are subject to change without notice

BeCool
www.becoolfan.com

8010 Triangle Fan Series

Demensions: 80X80X10 mm
Bearing Type: FDB,Hydraulic,Ball Bearing
Function Type: FG/RD Signal,PWM pulse
Protection: Auto Restart Protection or General Options



SPECIFICATIONS

MODEL NO	VOLTAGE	CURRENT	POWER	SPEED	AIR FLOW		STATIC PRESSURE		NOISE	CURVE
	V	A	W	RPM	CMM	CFM	mmH_2O	INH_2O	(dBA)	
8010B/RVL-N(P/M)5	5	0.16	0.80	2000	0.407	14.39	0.86	0.034	23.1	L
8010B/RVM-N(P/M)5	5	0.25	1.25	2500	0.504	17.80	1.30	0.051	27.2	M
8010B/RVH-N(P/M)5	5	0.70	3.50	4200	0.895	31.64	3.43	0.135	38.9	H
8010B/RVL-N(P/M)1	12	0.10	1.20	2000	0.407	14.39	0.86	0.034	23.1	L
8010B/RVM-N(P/M)1	12	0.14	1.68	2500	0.504	17.80	1.30	0.051	27.2	M
8010B/RVH-N(P/M)1	12	0.30	3.60	4200	0.895	31.64	3.43	0.135	38.9	H

PERFORMANCE CURVES

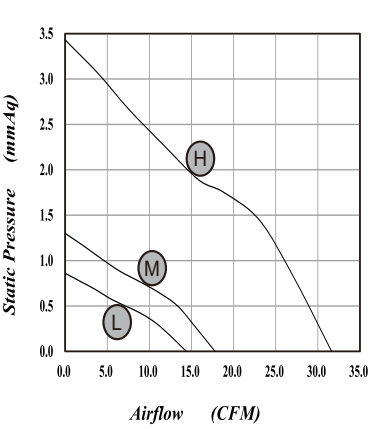

DIMENSIONS DRAWING

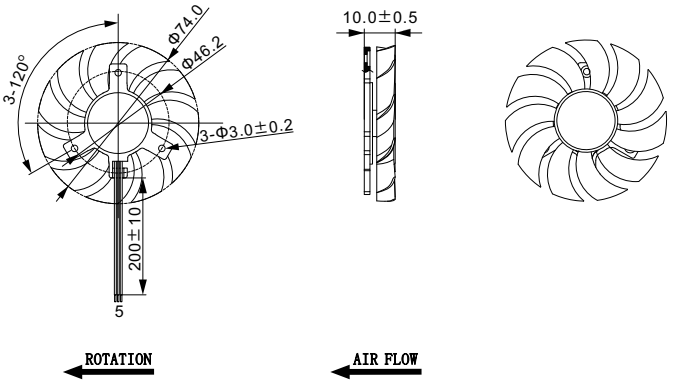

*Specifications are subject to change without notice

BeCool
www.becoolfan.com

8015 Triangle Fan Series



Demensions: 80X80X15 mm
Bearing Type: Hydraulic,Ball Bearing
Function Type: FG/RD Signal,PWM pulse
Protection: Auto Restart Protection or General Options

SPECIFICATIONS

MODEL NO	VOLTAGE	CURRENT	POWER	SPEED	AIR FLOW		STATIC PRESSURE		NOISE	CURVE
	V	A	W	RPM	CMM	CFM	mmH_2O	INH_2O	(dBA)	
8015S(B/R)VL-N(P/M)5	5	0.25	1.25	2000	0.554	19.56	1.21	0.048	26.9	L
8015S(B/R)VM-N(P/M)5	5	0.40	2.00	3000	0.887	31.34	2.81	0.111	35.4	M
8015S(B/R)VH-N(P/M)5	5	0.70	3.50	4000	1.183	41.79	4.57	0.180	42.6	H
8015S(B/R)VL-N(P/M)1	12	0.15	1.80	2000	0.554	19.56	1.21	0.048	26.9	L
8015S(B/R)VM-N(P/M)1	12	0.32	3.84	3000	0.887	31.34	2.81	0.111	35.4	M
8015S(B/R)VH-N(P/M)1	12	0.60	7.20	4000	1.183	41.79	4.57	0.180	42.6	H
8015S(B/R)VL-N(P/M)2	24	0.10	2.40	2000	0.554	19.56	1.21	0.048	26.9	L
8015S(B/R)VM-N(P/M)2	24	0.18	4.32	3000	0.887	31.34	2.81	0.111	35.4	M
8015S(B/R)VH-N(P/M)2	24	0.45	10.80	4000	1.183	41.79	4.57	0.180	42.6	H

PERFORMANCE CURVES

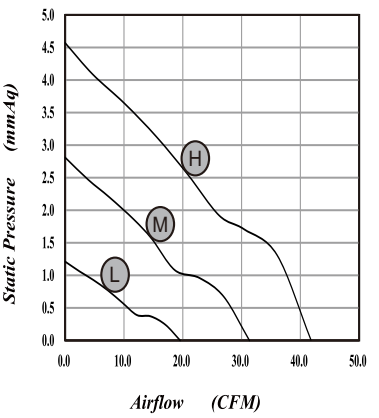

DIMENSIONS DRAWING

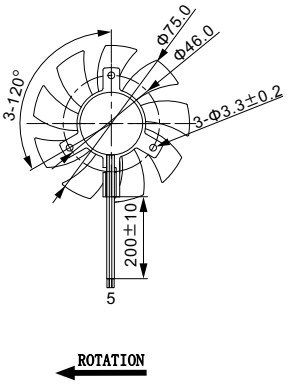

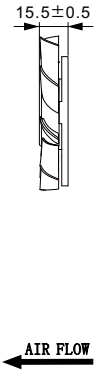

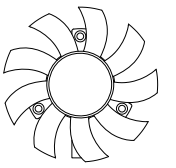

*Specifications are subject to change without notice

BeCool
www.becoolfan.com

8020 Triangle Fan Series



Demensions: 80X80X20 mm
Bearing Type: FDB,Hydraulic,Ball Bearing
Function Type: FG/RD Signal,PWM pulse
Protection: Auto Restart Protection or General Options

SPECIFICATIONS

MODEL NO	VOLTAGE	CURRENT	POWER	SPEED	AIR FLOW		STATIC PRESSURE		NOISE	CURVE
	V	A	W	RPM	CMM	CFM	mmH_2O	INH_2O	(dBA)	
8020B/RVL-N(P/M)5	5	0.28	1.40	2000	0.491	17.34	1.60	0.063	24.5	L
8020B/RVM-N(P/M)5	5	0.45	2.25	3500	0.850	30.04	4.26	0.168	37.0	M
8020B/RVH-N(P/M)5	5	0.65	3.25	5000	1.225	43.30	8.23	0.324	46.8	H
8020B/RVL-N(P/M)1	12	0.15	1.80	2000	0.491	17.34	1.60	0.063	24.5	L
8020B/RVM-N(P/M)1	12	0.40	4.80	3500	0.850	30.04	4.26	0.168	37.0	M
8020B/RVH-N(P/M)1	12	0.50	6.00	5000	1.225	43.30	8.23	0.324	46.8	H
8020B/RVL-N(P/M)2	24	0.10	2.40	2000	0.491	17.34	1.60	0.063	24.5	L
8020B/RVM-N(P/M)2	24	0.25	6.00	3500	0.850	30.04	4.26	0.168	37.0	M
8020B/RVH-N(P/M)2	24	0.45	10.80	5000	1.225	43.30	8.23	0.324	46.8	H

PERFORMANCE CURVES

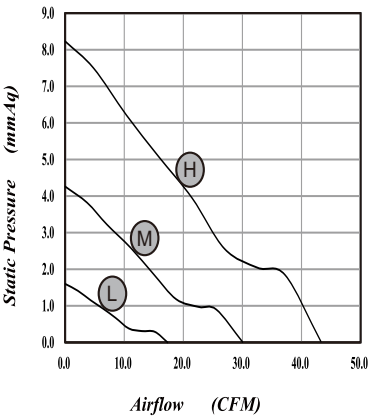

DIMENSIONS DRAWING

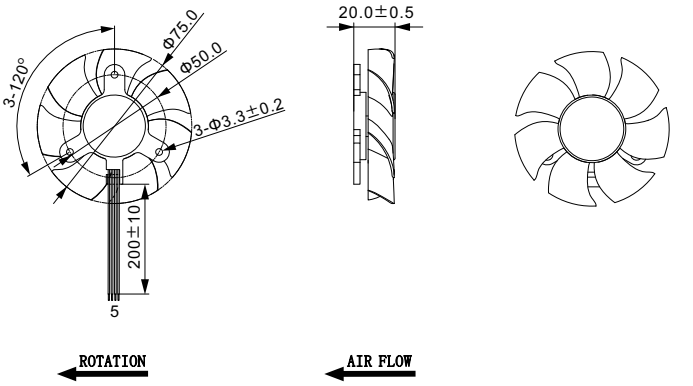

*Specifications are subject to change without notice

BeCool
www.becoolfan.com

8025 Triangle Fan Series



Demensions: 80X80X25 mm
Bearing Type: FDB,Hydraulic,Ball Bearing
Function Type: FG/RD Signal,PWM pulse
Protection: Auto Restart Protection or General Options

SPECIFICATIONS

MODEL NO	VOLTAGE	CURRENT	POWER	SPEED	AIR FLOW		STATIC PRESSURE		NOISE	CURVE
	V	A	W	RPM	CMM	CFM	mmH_2O	INH_2O	(dBA)	
AD8025B/R12L-N(P/M)	12	0.13	1.56	1800	0.663	23.41	1.57	0.062	18.1	L
AD8025B/R12M-N(P/M)	12	0.26	3.12	3100	1.120	39.55	4.03	0.158	32.7	M
AD8025B/R12H-N(P/M)	12	0.51	6.12	4800	1.725	60.90	9.01	0.354	48.1	H
AD8025B/R24L-N(P/M)	24	0.11	2.64	1800	0.663	23.41	1.57	0.062	18.1	L
AD8025B/R24M-N(P/M)	24	0.22	5.28	3100	1.120	39.55	4.03	0.158	32.7	M
AD8025B/R24H-N(P/M)	24	0.38	9.12	4800	1.725	60.90	9.01	0.354	48.1	H
AD8025B/R48L-N(P/M)	48	0.08	3.84	1800	0.663	23.41	1.57	0.062	18.1	L
AD8025B/R48M-N(P/M)	48	0.18	8.64	3100	1.120	39.55	4.03	0.158	32.7	M
AD8025B/R48H-N(P/M)	48	0.30	14.40	4800	1.725	60.90	9.01	0.354	48.1	H

PERFORMANCE CURVES

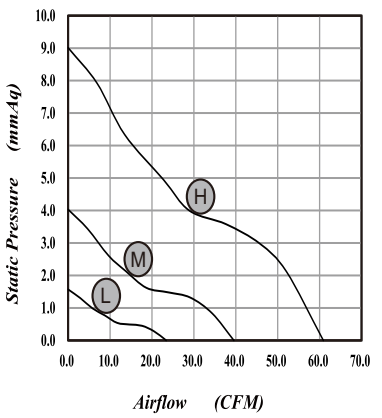

DIMENSIONS DRAWING

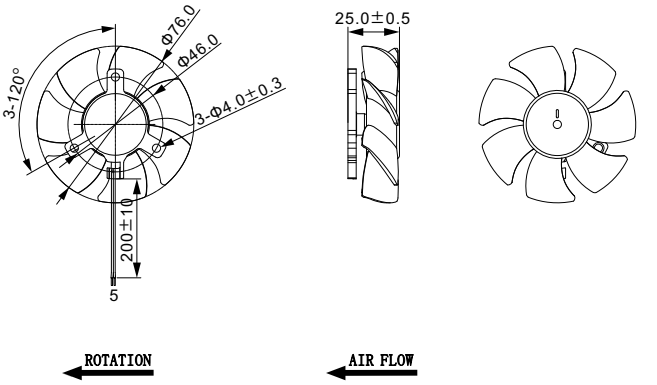

*Specifications are subject to change without notice

BeCool
www.becoolfan.com

9215 Triangle Fan Series

Demensions: 92X92X15 mm
Bearing Type: Ball Bearing
Function Type: FG/RD Signal,PWM pulse
Protection: Auto Restart Protection or General Options



SPECIFICATIONS

MODEL NO	VOLTAGE	CURRENT	POWER	SPEED	AIR FLOW		STATIC PRESSURE		NOISE	CURVE
	V	A	W	RPM	CMM	CFM	mmH_2O	INH_2O	(dBA)	
9215B/R12L-N(P/M)	12	0.10	1.20	1500	0.700	24.60	1.02	0.040	26.8	L
9215B/R12M-N(P/M)	12	0.25	3.00	2000	0.950	33.73	10.87	0.070	33.7	M
9215B/R12H-N(P/M)	12	0.45	5.40	2500	1.150	40.70	2.5167	0.110	39.8	H

PERFORMANCE CURVES

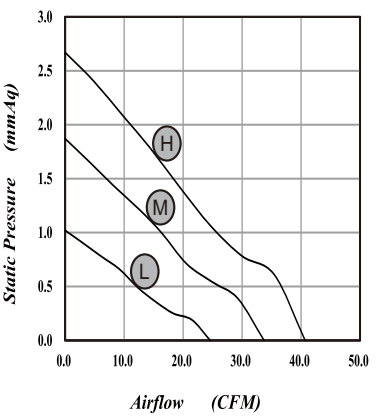

DIMENSIONS DRAWING

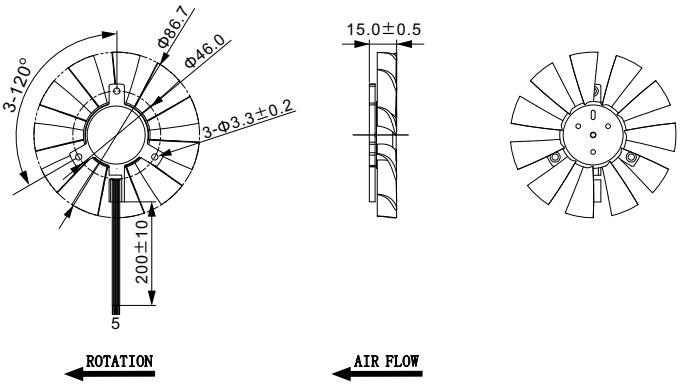

*Specifications are subject to change without notice

BeCool
www.becoolfan.com

9225 Triangle Fan Series



Demensions: 92X92X25 mm
Bearing Type: FDB,Hydraulic,Ball Bearing
Function Type: FG/RD Signal,PWM pulse
Protection: Auto Restart Protection or General Options

SPECIFICATIONS

MODEL NO	VOLTAGE	CURRENT	POWER	SPEED	AIR FLOW		STATIC PRESSURE		NOISE	CURVE
	V	A	W	RPM	CMM	CFM	mmH_2O	INH_2O	(dBA)	
AD9225B/R12L-N(P/M)	12	0.21	2.52	1800	0.805	28.43	1.35	0.053	26.7	L
AD9225B/R12ML-N(P/M)	12	0.40	4.80	2800	1.319	46.57	3.27	0.129	34.1	M
AD9225B/R12H-N(P/M)	12	0.61	7.20	4000	1.908	67.38	6.03	0.237	44.8	H
AD9225B12U-N(P/M)	12	1.20	14.40	6000	2.564	90.57	13.58	0.534	53.6	U
AD9225B/R24L-N(P/M)	24	0.15	3.60	1800	0.805	28.43	1.35	0.053	26.7	L
AD9225B/R24M-N(P/M)	24	0.30	7.20	2800	1.319	46.57	3.27	0.129	34.1	M
AD9225B/R24H-N(P/M)	24	0.80	19.20	4000	1.908	67.38	6.03	0.237	44.8	H
AD9225B24U-N(P/M)	24	0.75	18.00	6000	2.564	90.57	13.58	0.534	53.6	U
AD9225B/R48L-N(P/M)	48	0.12	5.76	1800	0.805	28.43	1.35	0.053	26.7	L
AD9225B/R48M-N(P/M)	48	0.21	10.08	2800	1.319	46.57	3.27	0.129	34.1	M
AD9225B/R48H-N(P/M)	48	0.45	21.60	4000	1.908	67.38	6.03	0.237	44.8	H
AD9225B48U-N(P/M)	48	0.50	24.00	6000	2.564	90.57	13.58	0.534	53.6	U

PERFORMANCE CURVES

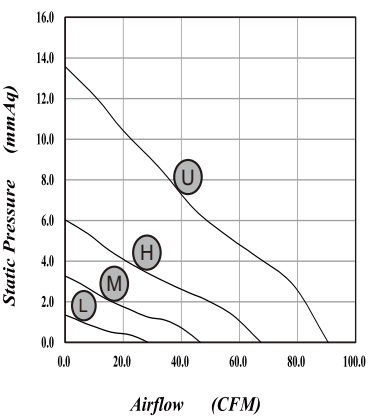

DIMENSIONS DRAWING

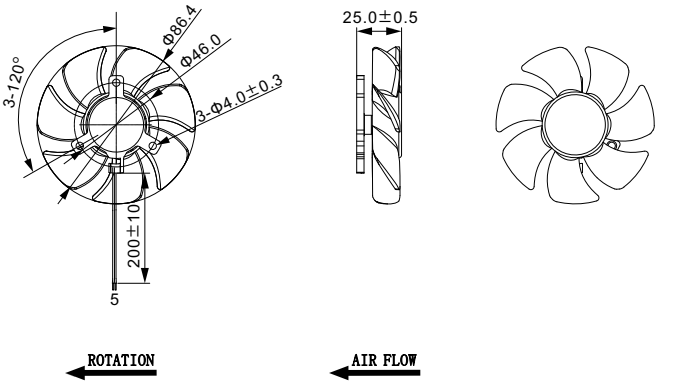

*Specifications are subject to change without notice

www.becoolfan.com

2006 Blower Series



Demensions: 20X20X06 mm

Bearing Type: Hydraulic

Function Type: FG/RD Signal,PWM pulse

Protection: Auto Restart Protection or General Options

SPECIFICATIONS

MODEL NO	VOLTAGE	CURRENT	POWER	SPEED	AIR FLOW		STATIC PRESSURE		NOISE	CURVE
	V	A	W	RPM	CMM	CFM	mmH_2O	INH_2O	(dBA)	
2006RVL-N(P/M)5	5	0.10	0.50	9000	0.004	0.15	1.89	0.074	19.5	L
2006RVM-N(P/M)5	5	0.15	0.75	13000	0.006	0.23	4.18	0.165	29.5	M
2006RVH-N(P/M)5	5	0.20	1.00	17000	0.010	0.36	7.65	0.301	36.4	H
2006RVL-N(P/M)1	12	0.06	0.72	9000	0.004	0.15	1.89	0.074	19.5	L
2006RVM-N(P/M)1	12	0.10	1.20	13000	0.006	0.23	4.18	0.165	29.5	M
2006RVH-N(P/M)1	12	0.15	1.80	17000	0.010	0.36	7.65	0.301	36.4	H

PERFORMANCE CURVES

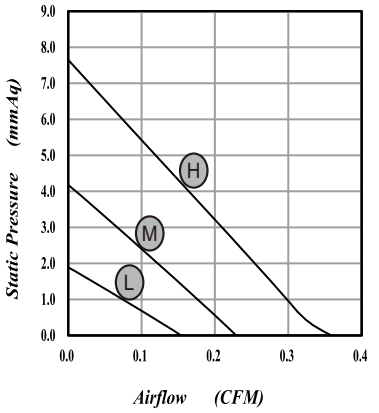

DIMENSIONS DRAWING

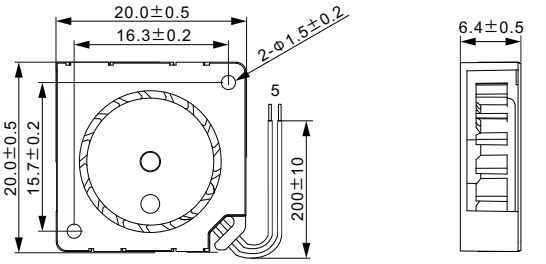

*Specifications are subject to change without notice

www.becoolfan.com

3004 Blower Series



Demensions: 30X30X04 mm

Bearing Type: FDB,Hydraulic

Function Type: FG/RD Signal,PWM pulse

Protection: Auto Restart Protection or General Options

SPECIFICATIONS

MODEL NO	VOLTAGE	CURRENT	POWER	SPEED	AIR FLOW		STATIC PRESSURE		NOISE	CURVE
	V	A	W	RPM	CMM	CFM	mmH_2O	INH_2O	(dBA)	
3004RVL-N (P/M) 5	5	0.10	0.50	9000	0.014	0.51	4.30	0.169	29.3	L
3004RVM-N (P/M) 5	5	0.20	1.00	11000	0.018	0.65	6.84	0.269	35.1	M
3004RVH-N (P/M) 5	5	0.30	1.50	13000	0.022	0.79	9.85	0.388	40.0	H
3004RVL-N (P/M) 1	12	0.05	0.06	9000	0.014	0.51	4.30	0.169	29.3	L
3004RVM-N (P/M) 1	12	0.10	1.20	11000	0.018	0.65	6.84	0.269	35.1	M
3004RVH-N (P/M) 1	12	0.15	1.80	13000	0.022	0.79	9.85	0.388	40.0	H

PERFORMANCE CURVES

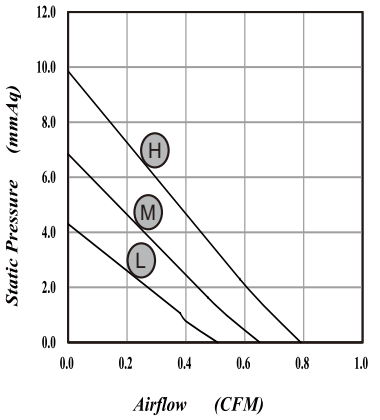

DIMENSIONS DRAWING

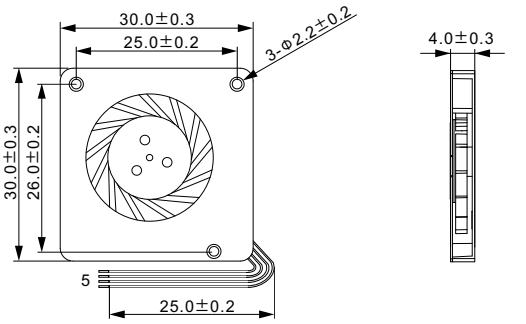

*Specifications are subject to change without notice

www.becoolfan.com

3007 Blower Series



Demensions: 30X30X07 mm

Bearing Type: FDB,Hydraulic

Function Type: FG/RD Signal,PWM pulse

Protection: Auto Restart Protection or General Options

SPECIFICATIONS

MODEL NO	VOLTAGE	CURRENT	POWER	SPEED	AIR FLOW		STATIC PRESSURE		NOISE	CURVE
	V	A	W	RPM	CMM	CFM	mmH_2O	INH_2O	(dBA)	
3007RVL-N(P/M)5	5	0.13	0.65	6000	0.025	0.90	3.01	0.118	21.5	L
3007RVM-N(P/M)5	5	0.22	1.10	8000	0.033	1.17	5.18	0.204	29.6	M
3007RVH-N(P/M)5	5	0.35	1.75	10000	0.041	1.45	8.74	0.344	34.9	H
3007RVL-N(P/M)1	12	0.07	0.84	6000	0.025	0.90	3.01	0.118	21.5	L
3007RVM-N(P/M)1	12	0.11	1.32	8000	0.033	1.17	5.18	0.204	29.6	M
3007RVH-N(P/M)1	12	0.17	2.04	10000	0.041	1.45	8.74	0.344	34.9	H

PERFORMANCE CURVES

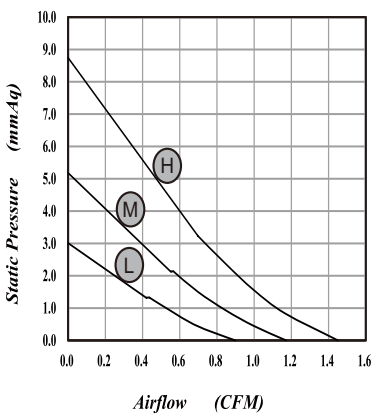

DIMENSIONS DRAWING

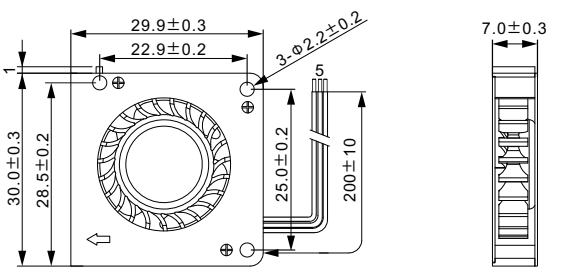

*Specifications are subject to change without notice

www.becoolfan.com

3010 Blower Series



Demensions: 30X30X10 mm

Bearing Type: FDB,Hydraulic,Ball Bearing

Function Type: FG/RD Signal,PWM pulse

Protection: Auto Restart Protection or General Options

SPECIFICATIONS

MODEL NO	VOLTAGE	CURRENT	POWER	SPEED	AIR FLOW		STATIC PRESSURE		NOISE	CURVE
	V	A	W	RPM	CMM	CFM	mmH_2O	INH_2O	(dBA)	
3010B/R05L-N(P/M)	5	0.18	0.90	5000	0.019	0.66	1.42	0.056	18.4	L
3010B/R05M-N(P/M)	5	0.25	1.25	7000	0.027	0.95	2.79	0.109	25.7	M
3010B/R05H-N(P/M)	5	0.32	1.60	9000	0.036	1.28	4.92	0.194	34.8	H
3010B/RVL-N(P/M) 1	12	0.13	1.56	5000	0.019	0.66	1.42	0.056	18.4	L
3010B/RVM-N(P/M) 1	12	0.20	2.40	7000	0.027	0.95	2.79	0.109	25.7	M
3010B/RVH-N(P/M) 1	12	0.32	3.84	9000	0.036	1.28	4.92	0.194	34.8	H

PERFORMANCE CURVES

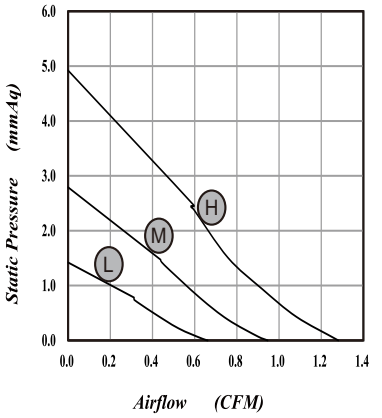

DIMENSIONS DRAWING

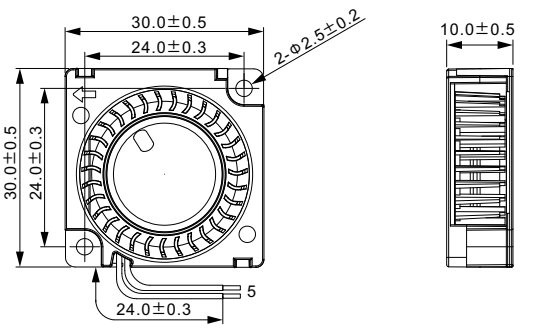

*Specifications are subject to change without notice

BeCool
www.becoolfan.com

4010 Blower Series

Demensions: 40X40X10 mm
Bearing Type: FDB,Hydraulic,Ball Bearing
Function Type: FG/RD Signal,PWM pulse
Protection: Auto Restart Protection or General Options



SPECIFICATIONS

MODEL NO	VOLTAGE	CURRENT	POWER	SPEED	AIR FLOW		STATIC PRESSURE		NOISE	CURVE
	V	A	W	RPM	CMM	CFM	mmH_2O	INH_2O	(dBA)	
AD4010B/R05L-N(P/M)	5	0.20	1.00	4500	0.039	1.37	3.52	0.139	22.2	L
AD4010B/R05M-N(P/M)	5	0.35	1.75	5500	0.049	1.72	5.44	0.214	26.6	M
AD4010B/R05H-N(P/M)	5	0.45	2.25	7300	0.064	2.27	9.05	0.356	32.7	H
4010B/RVL-N(P/M)1	12	0.13	1.56	4500	0.039	1.37	3.52	0.139	22.2	L
4010B/RVM-N(P/M)1	12	0.22	2.64	5500	0.049	1.72	5.44	0.214	26.6	M
4010B/RVH-N(P/M)1	12	0.35	4.20	7300	0.064	2.27	9.05	0.356	32.7	H

PERFORMANCE CURVES

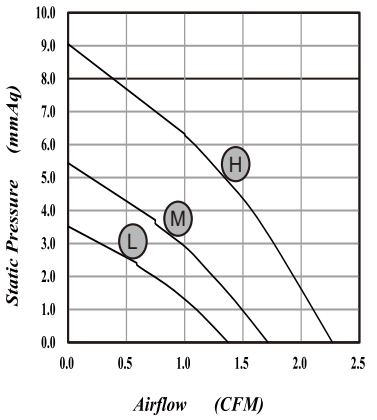

DIMENSIONS DRAWING

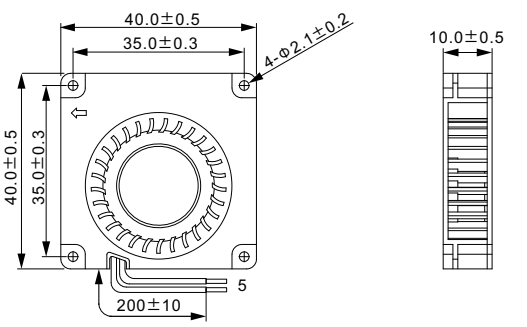

*Specifications are subject to change without notice

BeCool
www.becoolfan.com

4020 Blower Series



Demensions: 40X40X20 mm
Bearing Type: Hydraulic,Ball Bearing
Function Type: FG/RD Signal,PWM pulse
Protection: Auto Restart Protection or General Options

SPECIFICATIONS

MODEL NO	VOLTAGE	CURRENT	POWER	SPEED	AIR FLOW		STATIC PRESSURE		NOISE	CURVE
	V	A	W	RPM	CMM	CFM	mmH_2O	INH_2O	(dBA)	
402HB/RVL-N(P/M)5	5	0.15	0.75	4000	0.043	1.54	2.25	0.088	23.3	L
402HB/RVM-N(P/M)5	5	0.22	1.10	6000	0.067	2.40	5.89	0.231	34.7	M
402HB/RVH-N(P/M)5	5	0.32	1.60	8000	0.092	3.26	12.30	0.484	44.0	H
402HB/RVL-N(P/M)1	12	0.16	1.92	4000	0.043	1.54	2.25	0.088	23.3	L
402HB/RVM-N(P/M)1	12	0.25	3.00	6000	0.067	2.40	5.89	0.231	34.7	M
402HB/RVH-N(P/M)1	12	0.35	4.20	8000	0.092	3.26	12.30	0.484	44.0	H

PERFORMANCE CURVES

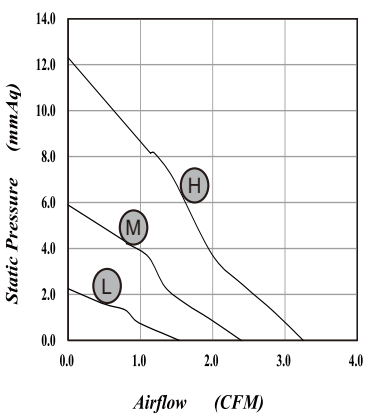

DIMENSIONS DRAWING

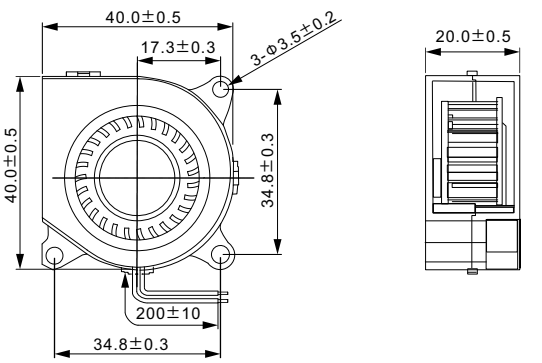

*Specifications are subject to change without notice

BeCool
www.becoolfan.com

4510 Blower Series



Demensions: 45X45X10 mm
Bearing Type: FDB,Hydraulic,Ball Bearing
Function Type: FG/RD Signal,PWM pulse
Protection: Auto Restart Protection or General Options

SPECIFICATIONS

MODEL NO	VOLTAGE	CURRENT	POWER	SPEED	AIR FLOW		STATIC PRESSURE		NOISE	CURVE
	V	A	W	RPM	CMM	CFM	mmH_2O	INH_2O	(dBA)	
4510B/RVL-N(P/M)5	5	0.20	1.00	3000	0.033	1.18	1.87	0.074	18.5	L
4510B/RVM-N(P/M)5	5	0.30	1.50	4000	0.047	1.67	3.72	0.146	23.7	M
4510B/RVH-N(P/M)5	5	0.40	2.00	5400	0.063	2.24	6.76	0.266	29.3	H
4510B/RVL-N(P/M)1	12	0.15	1.80	3000	0.033	1.18	1.87	0.074	18.5	L
4510B/RVM-N(P/M)1	12	0.25	3.00	4000	0.047	1.67	3.72	0.146	23.7	M
4510B/RVH-N(P/M)1	12	0.35	4.20	5400	0.063	2.24	6.76	0.266	29.3	H

PERFORMANCE CURVES

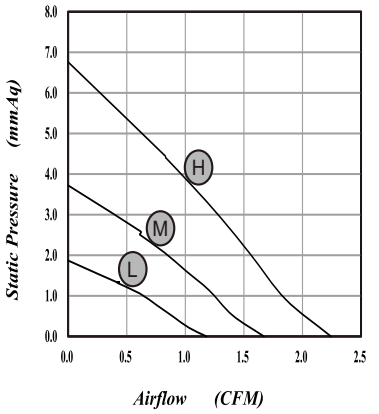

DIMENSIONS DRAWING

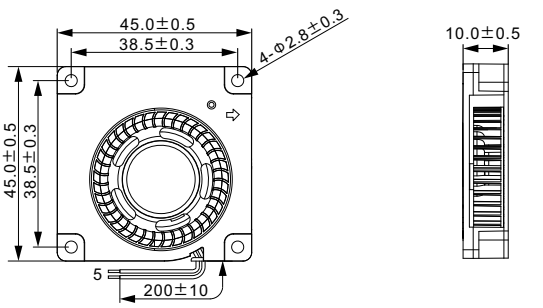

*Specifications are subject to change without notice

BeCool
www.becoolfan.com

5008 Blower Series



Demensions: 60X45.5X08 mm
Bearing Type: FDB,Hydraulic
Function Type: FG/RD Signal,PWM pulse
Protection: Auto Restart Protection or General Options

SPECIFICATIONS

MODEL NO	VOLTAGE	CURRENT	POWER	SPEED	AIR FLOW		STATIC PRESSURE		NOISE	CURVE
	V	A	W	RPM	CMM	CFM	mmH_2O	INH_2O	(dBA)	
5008RVL-N(P/M)5	5	0.20	1.00	2500	0.057	2.00	2.58	0.102	17.0	L
5008RVM-N(P/M)5	5	0.35	1.75	3500	0.078	2.75	5.05	0.199	25.4	M
5008RVH-N(P/M)5	5	0.65	3.25	5200	0.115	4.05	12.89	0.507	36.5	H
5008RVL-N(P/M)1	12	0.12	1.44	2500	0.057	2.00	2.58	0.102	17.0	L
5008RVM-N(P/M)1	12	0.25	3.00	3500	0.078	2.75	5.05	0.199	25.4	M
5008RVH-N(P/M)1	12	0.40	4.80	5200	0.115	4.05	12.89	0.507	36.5	H

PERFORMANCE CURVES

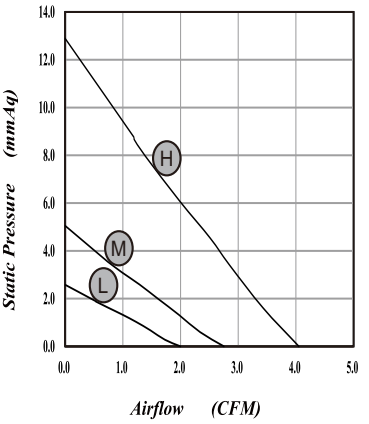

DIMENSIONS DRAWING

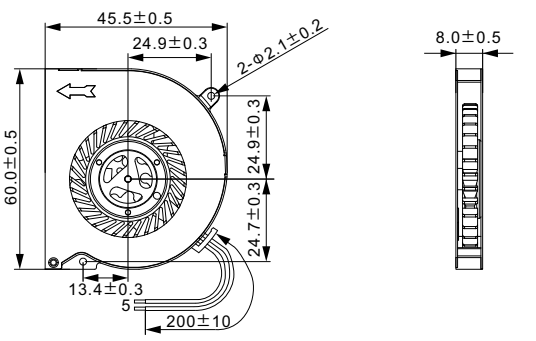

*Specifications are subject to change without notice

www.becoolfan.com

5010 Blower Series



Demensions: 50X50X10 mm

Bearing Type: FDB,Hydraulic,Ball Bearing

Function Type: FG/RD Signal,PWM pulse

Protection: Auto Restart Protection or General Options

SPECIFICATIONS

MODEL NO	VOLTAGE	CURRENT	POWER	SPEED	AIR FLOW		STATIC PRESSURE		NOISE	CURVE
	V	A	W	RPM	CMM	CFM	mmH_2O	INH_2O	(dBA)	
5010B/RVL-N(P/M)5	5	0.13	0.65	5000	0.060	2.12	4.31	0.170	28.7	L
5010B/RVM-N(P/M)5	5	0.33	1.65	7000	0.090	3.08	9.43	0.370	35.0	M
5010B/RVH-N(P/M)5	5	0.45	2.25	9500	0.120	4.29	19.78	0.780	44.4	H
5010B/RVL-N(P/M)1	12	0.16	1.92	5000	0.060	2.12	4.31	0.170	28.7	L
5010B/RVH-N(P/M)1	12	0.25	3.00	7000	0.090	3.08	9.43	0.370	35.0	M
5010B/RVM-N(P/M)1	12	0.35	4.20	9500	0.120	4.29	19.78	0.780	44.4	H

PERFORMANCE CURVES

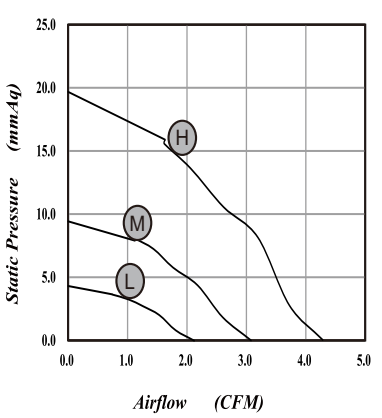

DIMENSIONS DRAWING

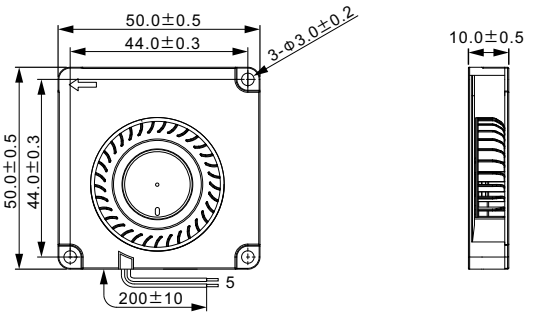

*Specifications are subject to change without notice

BeCool
www.becoolfan.com

5015-1 Blower Series



Demensions: 51X51X15 mm
Bearing Type: FDB,Hydraulic,Ball Bearing
Function Type: FG/RD Signal,PWM pulse
Protection: Auto Restart Protection or General Options

SPECIFICATIONS

MODEL NO	VOLTAGE	CURRENT	POWER	SPEED	AIR FLOW		STATIC PRESSURE		NOISE	CURVE
	V	A	W	RPM	CMM	CFM	mmH_2O	INH_2O	(dBA)	
5015B/RVL-N(P/M)5	5	0.25	1.25	3500	0.067	2.38	6.67	0.263	28.2	L
5015B/RVM-N(P/M)5	5	0.45	2.25	5500	0.088	3.11	15.48	0.610	40.9	M
5015B/RVH-N(P/M)5	5	0.60	3.00	7500	0.143	5.05	29.88	1.177	48.5	H
5015B/RVL-N(P/M)1	12	0.22	2.64	3500	0.067	2.38	6.67	0.263	28.2	L
5015B/RVM-N(P/M)1	12	0.32	3.84	5500	0.088	3.11	15.48	0.610	40.9	M
5015B/RVH-N(P/M)1	12	0.48	5.76	7500	0.143	5.05	29.88	1.177	48.5	H
5015B/RVL-N(P/M)2	24	0.12	2.88	3500	0.067	2.38	6.67	0.263	28.2	L
5015B/RVM-N(P/M)2	24	0.18	4.32	5500	0.088	3.11	15.48	0.610	40.9	M
5015B/RVH-N(P/M)2	24	0.27	6.48	7500	0.143	5.05	29.88	1.177	48.5	H

PERFORMANCE CURVES

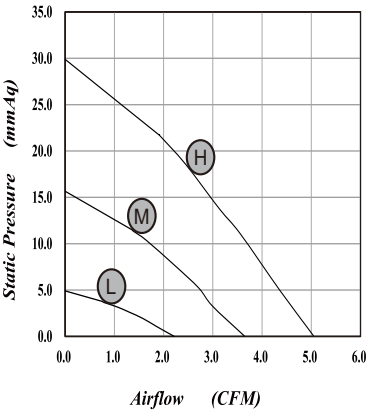

DIMENSIONS DRAWING

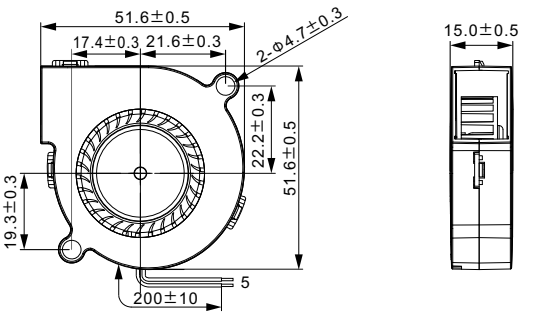

*Specifications are subject to change without notice

www.becoolfan.com

5015-2 Blower Series



Demensions: 51X50X15 mm

Bearing Type: FDB,Hydraulic,Ball Bearing

Function Type: FG/RD Signal,PWM pulse

Protection: Auto Restart Protection or General Options

SPECIFICATIONS

MODEL NO	VOLTAGE	CURRENT	POWER	SPEED	AIR FLOW		STATIC PRESSURE		NOISE	CURVE
	V	A	W	RPM	CMM	CFM	mmH_2O	INH_2O	(dBA)	
5015B/RVL-N(P/M)1	12	0.22	2.64	3500	0.090	3.24	6.66	0.260	25.9	L
5015B/RVM-N(P/M)1	12	0.32	3.84	5000	0.130	4.63	15.85	0.620	35.5	M
5015B/RVH-N(P/M)1	12	0.48	5.76	6500	0.170	5.90	29.78	1.170	42.8	H
5015B/RVL-N(P/M)2	24	0.16	3.84	3500	0.090	3.24	6.66	0.260	25.9	L
5015B/RVM-N(P/M)2	24	0.25	6.00	5000	0.130	4.63	15.85	0.620	35.5	M
5015B/RVH-N(P/M)2	24	0.35	8.40	6500	0.170	5.90	19.78	1.170	42.8	H

PERFORMANCE CURVES

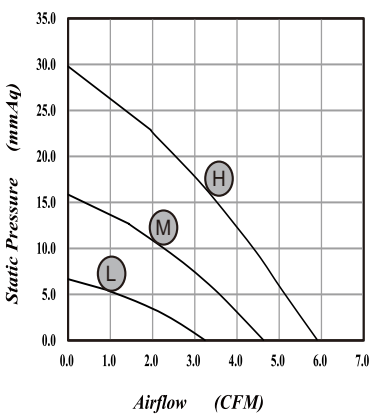

DIMENSIONS DRAWING

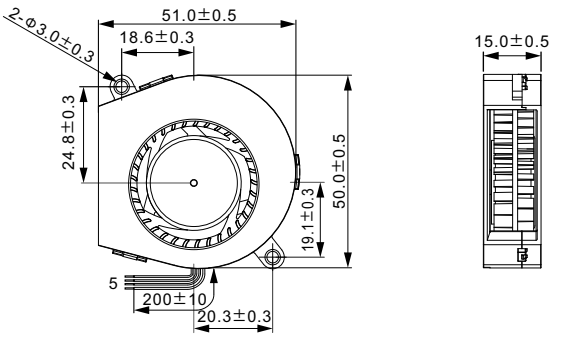

*Specifications are subject to change without notice

www.becoolfan.com

5020 Blower Series



Demensions: 50X50X20 mm

Bearing Type: FDB,Hydraulic,Ball Bearing

Function Type: FG/RD Signal,PWM pulse

Protection: Auto Restart Protection or General Options

SPECIFICATIONS

MODEL NO	VOLTAGE	CURRENT	POWER	SPEED	AIR FLOW		STATIC PRESSURE		NOISE	CURVE
	V	A	W	RPM	CMM	CFM	mmH_2O	INH_2O	(dBA)	
5020B/RVL-N(P/M)1	12	0.12	1.44	4500	0.122	4.29	8.31	0.327	29.5	L
5020B/RVM-N(P/M)1	12	0.26	3.12	6800	0.186	6.59	23.35	0.919	41.3	M
5020B/RVH-N(P/M)1	12	0.68	8.16	8500	0.231	8.17	38.70	1.524	47.1	H
5020B/RVL-N(P/M)2	24	0.15	3.60	4500	0.122	4.29	8.31	0.327	29.5	L
5020B/RVM-N(P/M)2	24	0.20	4.80	6800	0.186	6.59	23.35	0.919	41.3	M
5020B/RVH-N(P/M)2	24	0.35	8.40	8500	0.231	8.17	38.70	1.524	47.1	H

PERFORMANCE CURVES

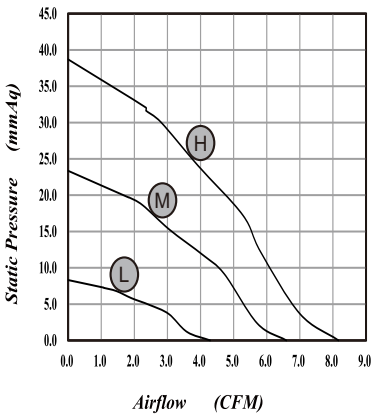

DIMENSIONS DRAWING

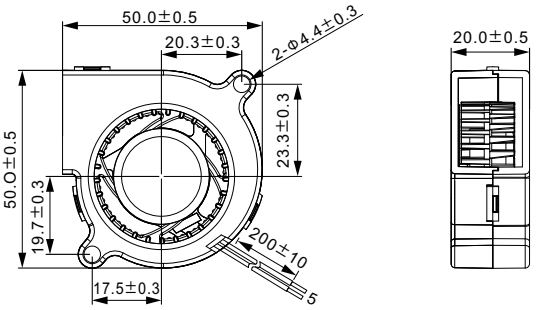

*Specifications are subject to change without notice

BeCool
www.becoolfan.com

6004 Blower Series



Demensions: 60X60X04 mm
Bearing Type: FDB,Hydraulic
Function Type: FG/RD Signal,PWM pulse
Protection: Auto Restart Protection or General Options

SPECIFICATIONS

MODEL NO	VOLTAGE	CURRENT	POWER	SPEED	AIR FLOW		STATIC PRESSURE		NOISE	CURVE
	V	A	W	RPM	CMM	CFM	mmH_2O	INH_2O	(dBA)	
6004RVL-N(P/M)5	5	0.20	1.00	4000	0.045	1.59	4.85	0.191	22.5	L
6004RVM-N(P/M)5	5	0.30	1.50	5000	0.057	2.03	7.98	0.314	29.2	M
6004RVH-N(P/M)5	5	0.50	2.50	5800	0.068	2.42	11.98	0.472	34.4	H
6004RVL-N(P/M)1	12	0.10	1.00	4000	0.045	1.59	4.85	0.191	22.5	L
6004RVM-N(P/M)1	12	0.15	1.50	5000	0.057	2.03	7.98	0.314	29.2	M
6004RVH-N(P/M)1	12	0.25	2.50	5800	0.068	2.42	11.98	0.472	34.4	H

PERFORMANCE CURVES

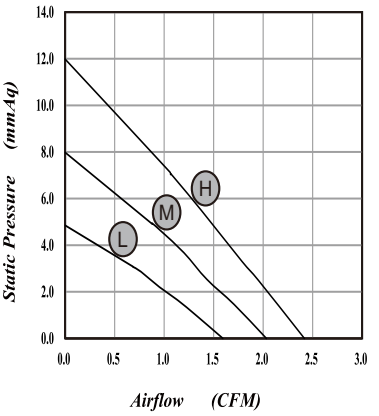

DIMENSIONS DRAWING

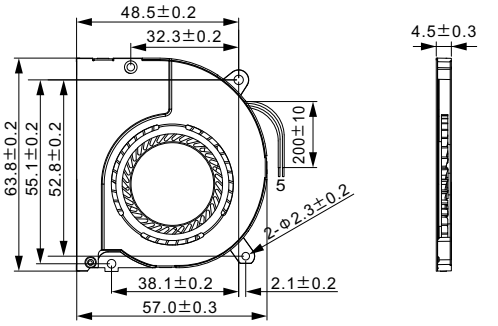

*Specifications are subject to change without notice

BeCool
www.becoolfan.com

6008 Blower Series

Demensions: 70X68.2X08 mm
Bearing Type: FDB,Hydraulic
Function Type: FG/RD Signal,PWM pulse
Protection: Auto Restart Protection or General Options



SPECIFICATIONS

MODEL NO	VOLTAGE	CURRENT	POWER	SPEED	AIR FLOW		STATIC PRESSURE		NOISE	CURVE
	V	A	W	RPM	CMM	CFM	mmH_2O	INH_2O	(dBA)	
6008RVL-N(P/M)5	5	0.20	1.00	2000	0.075	2.63	3.21	0.126	14.8	L
6008RVM-N(P/M)5	5	0.35	1.75	2500	0.091	3.20	4.80	0.189	18.4	M
6008RVH-N(P/M)5	5	0.65	3.25	3500	0.131	4.61	11.12	0.438	28.6	H
6008RVL-N(P/M)1	12	0.12	1.44	2000	0.075	2.63	3.21	0.126	14.8	L
6008RVM-N(P/M)1	12	0.25	3.00	2500	0.091	3.20	4.80	0.189	18.4	M
6008RVH-N(P/M)1	12	0.40	4.80	3500	0.131	4.61	11.12	0.438	28.6	H

PERFORMANCE CURVES

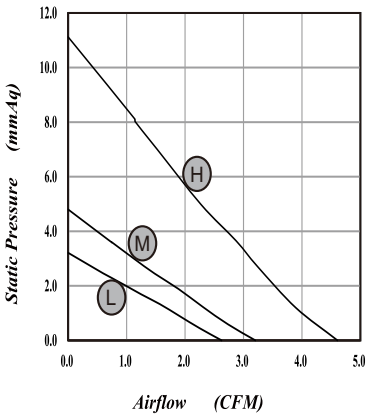

DIMENSIONS DRAWING

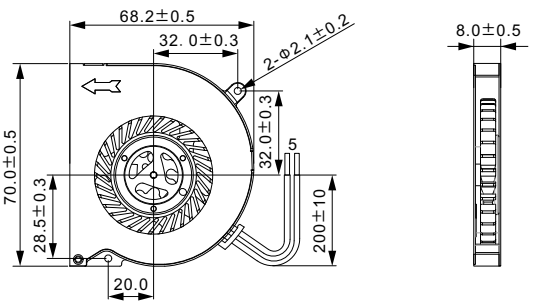

*Specifications are subject to change without notice

BeCool
www.becoolfan.com

6015-1 Blower Series



Demensions: 60X60X15 mm
Bearing Type: Hydraulic,Ball Bearing
Function Type: FG/RD Signal,PWM pulse
Protection: Auto Restart Protection or General Options

SPECIFICATIONS

MODEL NO	VOLTAGE	CURRENT	POWER	SPEED	AIR FLOW		STATIC PRESSURE		NOISE	CURVE
	V	A	W	RPM	CMM	CFM	mmH_2O	INH_2O	(dBA)	
6015B/RVL-N(P/M)5	5	0.30	1.50	4000	0.109	3.87	10.57	0.416	43.3	L
6015B/RVM-N(P/M)5	5	0.40	2.00	5000	0.135	4.78	17.44	0.687	50.0	M
6015B/RVH-N(P/M)5	5	0.50	2.50	6000	0.166	5.85	27.53	1.084	54.0	H
6015B/RVL-N(P/M)1	12	0.22	2.64	4000	0.109	3.87	10.57	0.416	43.3	L
6015B/RVM-N(P/M)1	12	0.33	3.96	5000	0.135	4.78	17.44	0.687	50.0	M
6015B/RVH-N(P/M)1	12	0.45	5.40	6000	0.166	5.85	27.53	1.084	54.0	H

PERFORMANCE CURVES

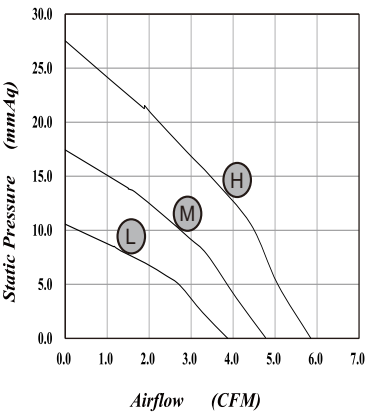

DIMENSIONS DRAWING

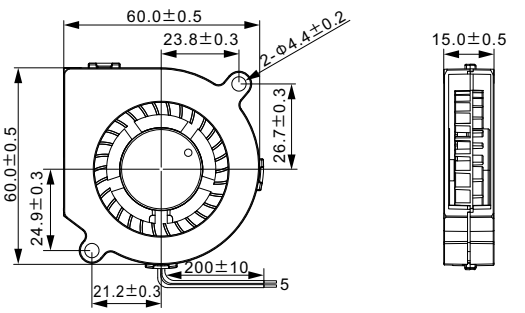

*Specifications are subject to change without notice

www.becoolfan.com

6015-2 Blower Series

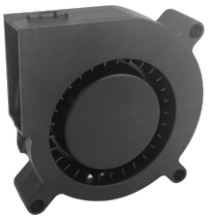

Demensions: 60X60X15 mm

Bearing Type: Hydraulic,Ball Bearing

Function Type: FG/RD Signal,PWM pulse

Protection: Auto Restart Protection or General Options

SPECIFICATIONS

MODEL NO	VOLTAGE	CURRENT	POWER	SPEED	AIR FLOW		STATIC PRESSURE		NOISE	CURVE
	V	A	W	RPM	CMM	CFM	mmH_2O	INH_2O	(dBA)	
6015B/RVL-N(P/M)5	5	0.30	1.50	4000	0.110	3.91	8.96	0.352	38.0	L
6015B/RVM-N(P/M)5	5	0.40	2.00	5000	0.141	4.98	15.52	0.611	44.8	M
6015B/RVH-N(P/M)5	5	0.50	2.50	6000	0.171	6.05	25.79	1.015	49.5	H
6015B/RVL-N(P/M)1	12	0.22	2.64	4000	0.110	3.91	8.96	0.352	38.0	L
6015B/RVM-N(P/M)1	12	0.35	3.96	5000	0.141	4.98	15.52	0.611	44.8	M
6015B/RVH-N(P/M)1	12	0.45	5.40	6000	0.171	6.05	25.79	1.015	49.5	H

PERFORMANCE CURVES

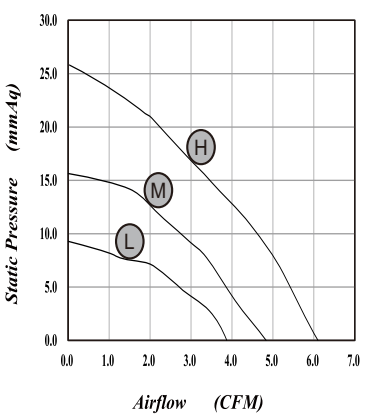

DIMENSIONS DRAWING

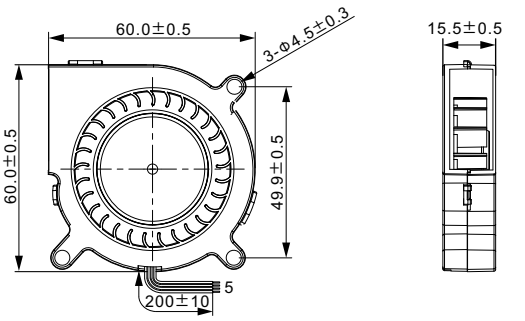

*Specifications are subject to change without notice

BeCool
www.becoolfan.com

6025 Blower Series



Demensions: 60X60X25 mm

Bearing Type: Hydraulic,Ball Bearing

Function Type: FG/RD Signal,PWM pulse

Protection: Auto Restart Protection or General Options

SPECIFICATIONS

MODEL NO	VOLTAGE	CURRENT	POWER	SPEED	AIR FLOW		STATIC PRESSURE		NOISE	CURVE
	V	A	W	RPM	CMM	CFM	mmH_2O	INH_2O	(dBA)	
6025B/RVL-N(P/M)1	12	0.22	2.64	4000	0.200	7.18	11.40	0.450	38.0	L
6025B/RVM-N(P/M)1	12	0.35	4.20	5500	0.290	10.11	27.85	1.100	46.3	M
6025B/RVH-N(P/M)1	12	0.55	6.60	7000	0.360	12.88	51.66	2.040	52.0	H
6025B/RVL-N(P/M)2	24	0.20	4.80	4000	0.200	7.18	11.40	0.450	38.0	L
6025B/RVM-N(P/M)2	24	0.30	7.20	5500	0.290	10.11	27.85	1.100	46.3	M
6025B/RVH-N(P/M)2	24	0.50	12.00	7000	0.360	12.88	51.66	2.040	52.0	H

PERFORMANCE CURVES

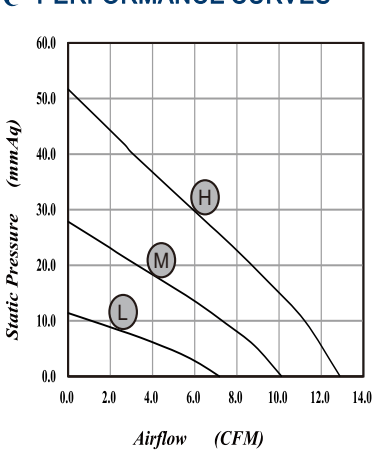

DIMENSIONS DRAWING

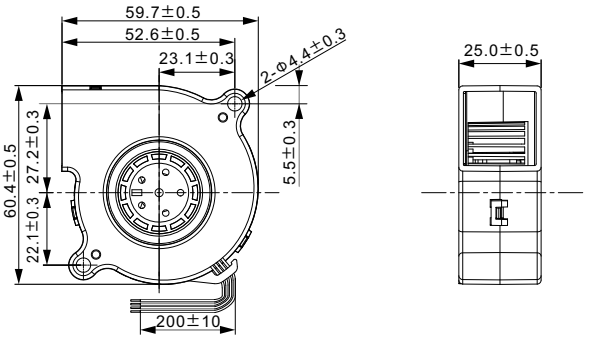

*Specifications are subject to change without notice

BeCool
www.becoolfan.com

6028 Blower Series



Demensions: 60X60X28 mm
Bearing Type: FDB,Hydraulic,Ball Bearing
Function Type: FG/RD Signal,PWM pulse
Protection: Auto Restart Protection or General Options

SPECIFICATIONS

MODEL NO	VOLTAGE	CURRENT	POWER	SPEED	AIR FLOW		STATIC PRESSURE		NOISE	CURVE
	V	A	W	RPM	CMM	CFM	mmH_2O	INH_2O	(dBA)	
6028B/RVL-N(P/M)1	12	0.30	3.60	2500	0.102	3.59	1.44	0.057	22.0	L
6028B/RVM-N(P/M)1	12	0.40	4.80	3500	0.146	5.15	3.20	0.126	30.4	M
6028B/RVH-N(P/M)1	12	0.50	6.00	4500	0.167	6.77	5.88	0.231	41.1	H
6028B/RVL-N(P/M)2	24	0.15	3.60	2500	0.102	3.59	1.44	0.057	22.0	L
6028B/RVM-N(P/M)2	24	0.35	6.40	3500	0.146	5.15	3.20	0.126	30.4	M
6028B/RVH-N(P/M)2	24	0.45	10.80	4500	0.167	6.77	5.88	0.231	41.1	H

PERFORMANCE CURVES

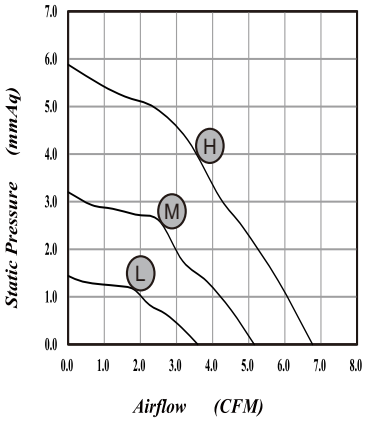

DIMENSIONS DRAWING

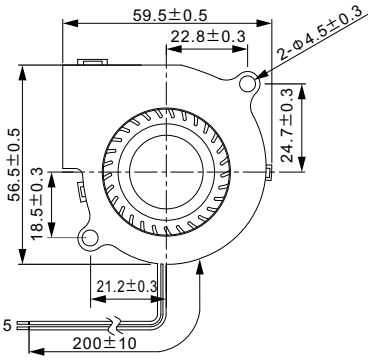

*Specifications are subject to change without notice

www.becoolfan.com

7015 Blower Series

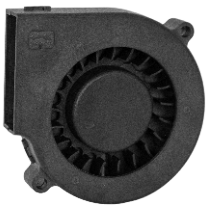

Demensions: 77X75X15.5 mm

Bearing Type: FDB,Hydraulic,Ball Bearing

Function Type: FG/RD Signal,PWM pulse

Protection: Auto Restart Protection or General Options

SPECIFICATIONS

MODEL NO	VOLTAGE	CURRENT	POWER	SPEED	AIR FLOW		STATIC PRESSURE		NOISE	CURVE
	V	A	W	RPM	CMM	CFM	mmH_2O	INH_2O	(dBA)	
7015B/RVL-N(P/M)1	12	0.24	2.88	2800	0.167	5.91	9.58	0.377	33.9	L
7015B/RVM-N(P/M)1	12	0.35	4.20	4000	0.239	8.44	22.44	0.883	44.6	M
7015B/RVH-N(P/M)1	12	0.55	6.60	5000	0.293	10.36	34.85	1.372	52.2	H
7015B/RVL-N(P/M)2	24	0.12	2.88	2600	0.167	5.91	9.58	0.377	33.9	L
7015B/RVM-N(P/M)2	24	0.22	5.28	4000	0.239	8.44	22.44	0.883	44.6	M
7015B/RVH-N(P/M)2	24	0.40	9.60	5000	0.293	10.36	34.85	1.372	52.2	H

PERFORMANCE CURVES

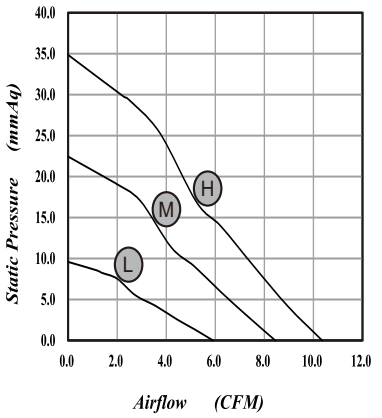

DIMENSIONS DRAWING

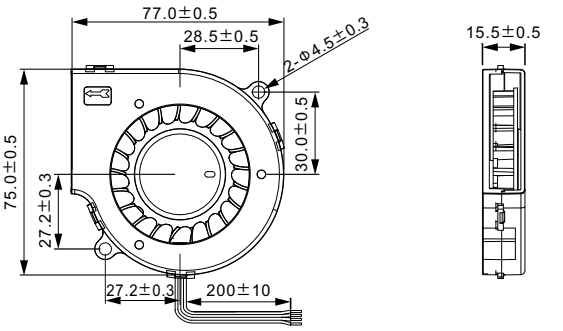

*Specifications are subject to change without notice

BeCool
www.becoolfan.com

7525 Blower Series



Demensions: 75X74.5X25 mm
Bearing Type: FDB,Hydraulic,Ball Bearing
Function Type: FG/RD Signal,PWM pulse
Protection: Auto Restart Protection or General Options

SPECIFICATIONS

MODEL NO	VOLTAGE	CURRENT	POWER	SPEED	AIR FLOW		STATIC PRESSURE		NOISE	CURVE
	V	A	W	RPM	CMM	CFM	mmH_2O	INH_2O	(dBA)	
7525B/RVL-N(P/M)1	12	0.30	3.60	2500	0.204	7.21	6.10	0.240	31.0	L
7525B/RVM-N(P/M)1	12	0.40	4.80	3700	0.294	10.38	14.18	0.558	42.8	M
7525B/RVH-N(P/M)1	12	0.80	9.60	5500	0.442	15.61	38.37	1.511	51.3	H
7525B/RVL-N(P/M)2	24	0.15	3.60	2500	0.204	7.21	6.10	0.240	31.0	L
7525B/RVM-N(P/M)2	24	0.20	4.80	3700	0.294	10.38	14.18	0.558	42.8	M
7525B/RVH-N(P/M)2	24	0.40	9.60	5500	0.442	15.61	38.37	1.511	51.3	H

PERFORMANCE CURVES

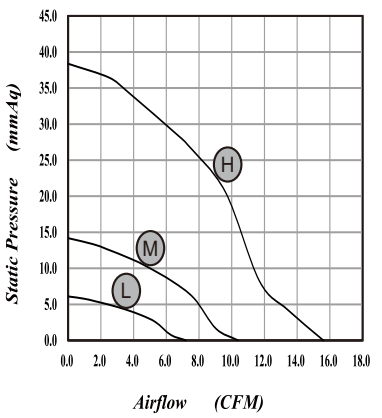

DIMENSIONS DRAWING

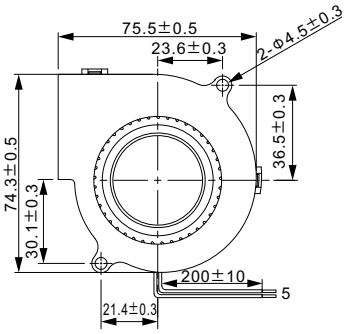

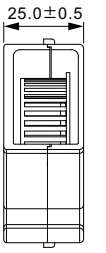

*Specifications are subject to change without notice

BeCool
www.becoolfan.com

7530 Blower Series



Demensions: 75X75X30 mm
Bearing Type: FDB,Hydraulic,Ball Bearing
Function Type: FG/RD Signal,PWM pulse
Protection: Auto Restart Protection or General Options

SPECIFICATIONS

MODEL NO	VOLTAGE	CURRENT	POWER	SPEED	AIR FLOW		STATIC PRESSURE		NOISE	CURVE
	V	A	W	RPM	CMM	CFM	mmH_2O	INH_2O	(dBA)	
7530B/RVL-N(P/M)1	12	0.25	3.00	3000	0.270	9.53	6.13	0.241	35.8	L
7530B/RVM-N(P/M)1	12	0.40	4.80	4000	0.365	12.88	12.32	0.349	44.5	M
7530B/RVH-N(P/M)1	12	0.55	6.60	5500	0.489	17.25	26.00	1.024	51.3	H
7530B/RVL-N(P/M)2	24	0.15	3.60	3000	0.270	9.53	6.13	0.241	35.8	L
7530B/RVM-N(P/M)2	24	0.25	6.00	4000	0.365	12.88	12.32	0.349	44.5	M
7530B/RVH-N(P/M)2	24	0.35	8.40	5500	0.489	17.25	26.00	1.024	51.3	H

PERFORMANCE CURVES

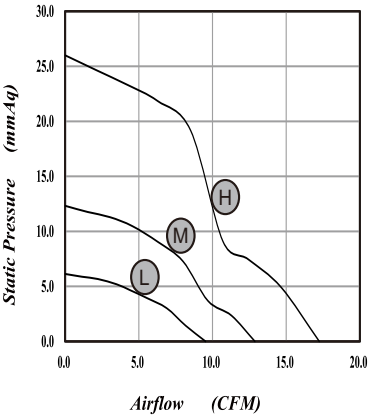

DIMENSIONS DRAWING

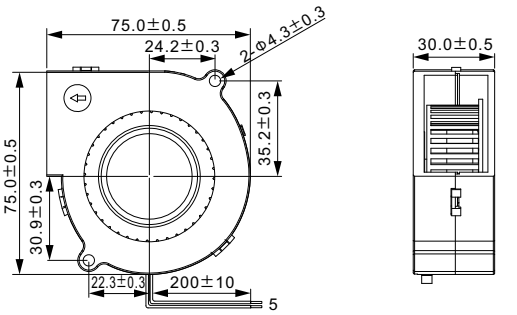

*Specifications are subject to change without notice

BeCool
www.becoolfan.com

8015 Blower Series

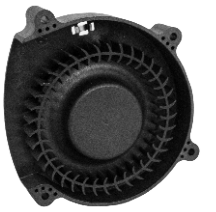

Demensions: 79.5X77X15 mm
Bearing Type: Ball Bearing
Function Type: FG/RD Signal,PWM pulse
Protection: Auto Restart Protection or General Options

SPECIFICATIONS

MODEL NO	VOLTAGE	CURRENT	POWER	SPEED	AIR FLOW		STATIC PRESSURE		NOISE	CURVE
	V	A	W	RPM	CMM	CFM	mmH_2O	INH_2O	(dBA)	
8015BVL-N(P/M)1	12	0.60	7.20	4400	0.350	12.23	23.08	0.910	50.4	L
8015BVM-N(P/M)1	12	1.00	12.00	5500	0.450	15.79	42.40	1.670	56.7	M
8015BVH-N(P/M)1	12	1.50	18.00	6600	0.530	18.63	60.50	2.380	60.9	H

PERFORMANCE CURVES

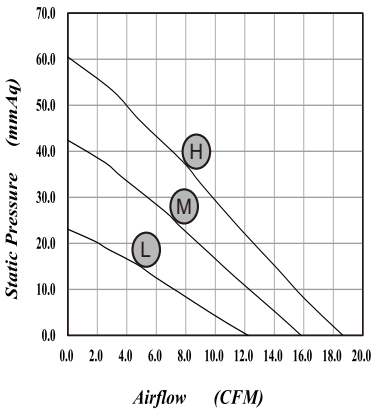

DIMENSIONS DRAWING

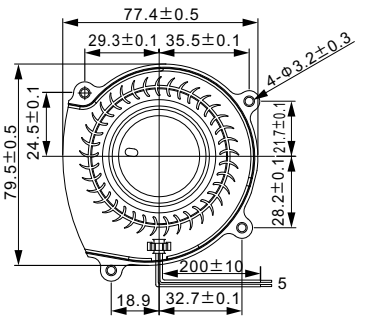

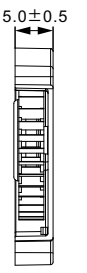

*Specifications are subject to change without notice

www.becoolfan.com

8018 Blower Series



Demensions: 80X80X17.5 mm

Bearing Type: Hydraulic,Ball Bearing

Function Type: FG/RD Signal,PWM pulse

Protection: Auto Restart Protection or General Options

SPECIFICATIONS

MODEL NO	VOLTAGE	CURRENT	POWER	SPEED	AIR FLOW		STATIC PRESSURE		NOISE	CURVE
	V	A	W	RPM	CMM	CFM	mmH_2O	INH_2O	(dBA)	
8020B/RVL-N(P/M)1	12	0.30	3.60	1500	0.149	5.27	2.18	0.086	17.1	L
8020B/RVM-N(P/M)1	12	0.40	4.80	2500	0.244	8.61	6.46	0.254	28.3	M
8020B/RVH-N(P/M)1	12	0.50	6.00	3400	0.315	11.12	11.28	0.444	36.4	H
8020B/RVL-N(P/M)2	24	0.15	3.60	1500	0.149	5.27	2.18	0.086	17.1	L
8020B/RVM-N(P/M)2	24	0.20	4.80	2500	0.244	8.61	6.46	0.254	28.3	M
8020B/RVH-N(P/M)2	24	0.25	6.00	3400	0.315	11.12	11.28	0.444	36.4	H

PERFORMANCE CURVES

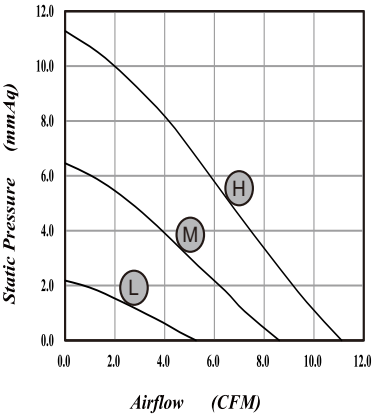

DIMENSIONS DRAWING

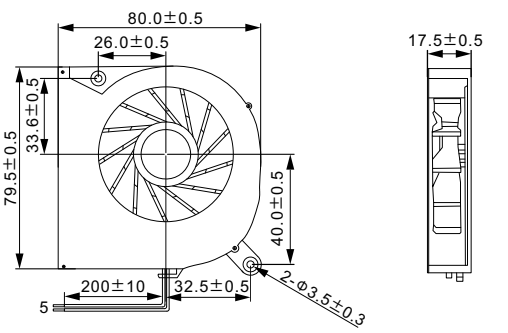

*Specifications are subject to change without notice

BeCool
www.becoolfan.com

9733-1 Blower Series

Demensions: 97X94X33 mm
Bearing Type: Ball Bearing
Function Type: FG/RD Signal,PWM pulse
Protection: Auto Restart Protection or General Options



SPECIFICATIONS

MODEL NO	VOLTAGE	CURRENT	POWER	SPEED	AIR FLOW		STATIC PRESSURE		NOISE	CURVE
	V	A	W	RPM	CMM	CFM	mmH_2O	INH_2O	(dBA)	
9733BVL-N(P/M)1	12	0.25	3.00	2000	0.607	15.41	7.01	0.276	40.4	L
9733BVM-N(P/M)1	12	0.40	4.80	3000	0.641	22.62	15.15	0.596	50.7	M
9733BVH-N(P/M)1	12	0.56	6.72	4000	0.863	30.48	29.53	1.162	56.9	H
9733BVL-N(P/M)2	24	0.15	3.60	2000	0.607	15.41	7.01	0.276	40.4	L
9733BVM-N(P/M)2	24	0.25	6.00	3000	0.641	22.62	15.15	0.596	50.7	M
9733BVH-N(P/M)2	24	0.35	8.40	4000	0.863	30.48	29.53	1.162	56.9	H
9733BVL-N(P/M)4	48	0.10	4.80	2000	0.607	15.41	7.01	0.276	40.4	L
9733BVM-N(P/M)4	48	0.15	7.20	3000	0.641	22.62	15.15	0.596	50.7	M
9733BVH-N(P/M)4	48	0.25	12.00	4000	0.863	30.48	29.53	1.162	56.9	H

PERFORMANCE CURVES

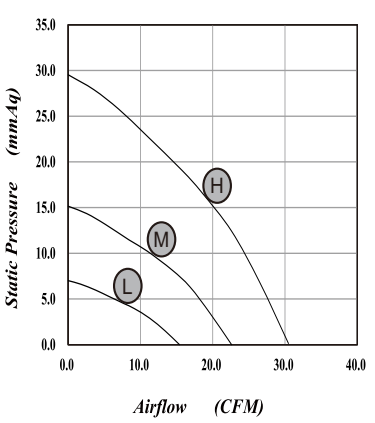

DIMENSIONS DRAWING

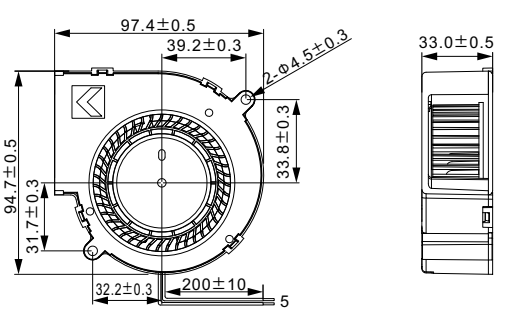

*Specifications are subject to change without notice

BeCool
www.becoolfan.com

9733-2 Blower Series



Demensions: 97X94X33 mm
Bearing Type: Ball Bearing
Function Type: FG/RD Signal,PWM pulse
Protection: Auto Restart Protection or General Options

SPECIFICATIONS

MODEL NO	VOLTAGE	CURRENT	POWER	SPEED	AIR FLOW		STATIC PRESSURE		NOISE	CURVE
	V	A	W	RPM	CMM	CFM	mmH2O	INH2O	(dBA)	
9733BVH-N(P/M)1	12	0.56	6.72	3000	0.647	22.83	18.48	0.727	47.6	H
9733BVU-N(P/M)1	12	2.00	24.00	5500	1.186	41.85	62.10	2.445	60.8	U
9733BVE-N(P/M)1	12	5.00	60.00	7200	1.576	55.65	127.50	5.020	66.6	E
9733BVH-N(P/M)2	24	0.40	9.60	3000	0.647	22.83	18.48	0.727	47.6	H
9733BVU-N(P/M)2	24	1.00	24.00	5500	1.186	41.85	62.10	2.445	60.8	U
9733BVE-N(P/M)2	24	2.50	60.00	7200	1.576	55.65	127.50	5.020	66.6	E
9733BVH-N(P/M)4	48	0.25	12.00	3000	0.647	22.83	18.48	0.727	47.6	H
9733BVU-N(P/M)4	48	0.60	28.80	5500	1.186	41.85	62.10	2.445	60.8	U
9733BVE-N(P/M)4	48	1.50	72.00	7200	1.576	55.65	127.50	5.020	66.6	E

PERFORMANCE CURVES

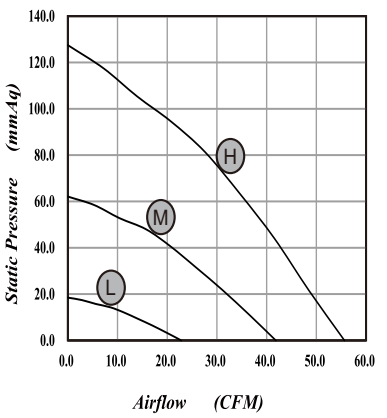

DIMENSIONS DRAWING

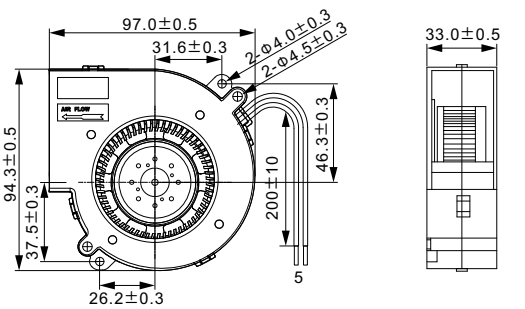

*Specifications are subject to change without notice

www.becoolfan.com

10025 Centrifugal Series



Demensions: Φ100X26 mm
Bearing Type: Ball Bearing
Function Type: FG/RD Signal,PWM pulse
Protection: Auto Restart Protection or General Options

SPECIFICATIONS

MODEL NO	VOLTAGE	CURRENT	POWER	SPEED	AIR FLOW		STATIC PRESSURE		NOISE	CURVE
	V	A	W	RPM	CMM	CFM	mmH_2O	INH_2O	(dBA)	
10025BVL-N(P/M)1	12	0.70	8.40	4500	1.285	45.41	30.27	1.191	57.5	L
10025BVM-N(P/M)1	12	0.90	10.80	5500	1.565	55.30	39.98	1.574	61.2	M
10025BVH-N(P/M)1	12	1.50	18.00	6400	1.875	66.23	47.17	1.857	64.8	H
10025BVL-N(P/M)2	24	0.18	4.32	4500	1.285	45.41	30.27	1.191	57.5	L
10025BVM-N(P/M)2	24	0.35	8.40	5500	1.565	55.30	39.98	1.574	61.2	M
10025BVH-N(P/M)2	24	0.80	19.20	6400	1.875	66.23	47.17	1.857	64.8	H

PERFORMANCE CURVES

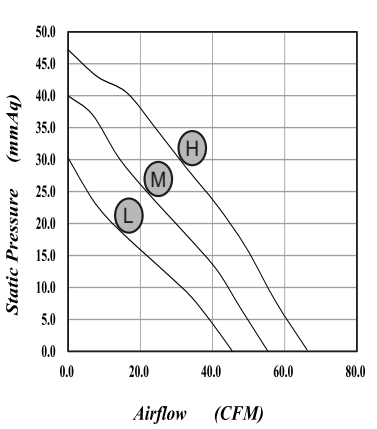

DIMENSIONS DRAWING

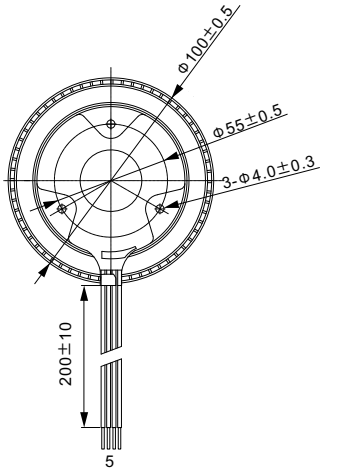

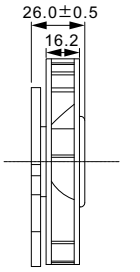

*Specifications are subject to change without notice

www.becoolfan.com

11025 Centrifugal Series



Demensions: 110X110X26 mm

Bearing Type: Ball Bearing

Function Type: FG/RD Signal,PWM pulse

Protection: Auto Restart Protection or General Options

SPECIFICATIONS

MODEL NO	VOLTAGE	CURRENT	POWER	SPEED	AIR FLOW		STATIC PRESSURE		NOISE	CURVE
	V	A	W	RPM	CMM	CFM	mmH_2O	INH_2O	(dBA)	
11025BVL-N(P/M)1	12	0.50	6.00	3000	1.207	42.63	16.83	0.662	50.5	L
11025BVM-N(P/M)1	12	1.00	12.00	4000	1.572	55.54	30.25	1.190	57.5	M
11025BVH-N(P/M)1	12	2.00	24.00	5500	2.173	76.77	58.65	2.309	65.0	H
11025BVL-N(P/M)2	24	0.25	6.00	3000	1.207	42.63	16.83	0.662	50.5	L
11025BVM-N(P/M)2	24	0.50	12.00	4000	1.572	55.54	30.25	1.190	57.5	M
11025BVH-N(P/M)2	24	1.00	24.00	5500	2.173	76.77	58.65	2.309	65.0	H

PERFORMANCE CURVES

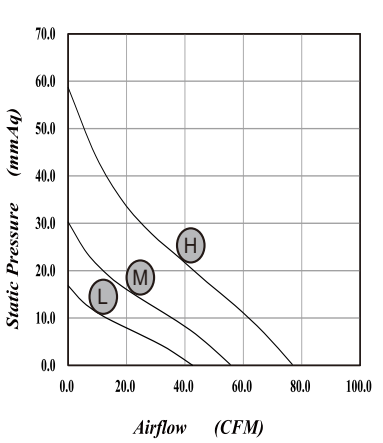

DIMENSIONS DRAWING

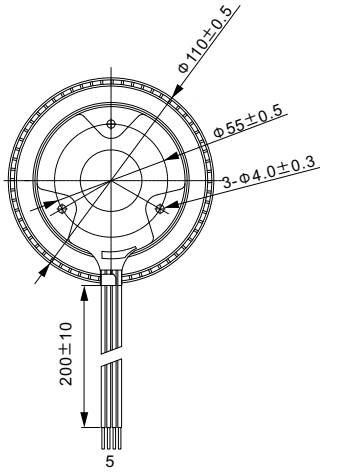

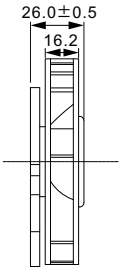

*Specifications are subject to change without notice

BeCool
www.becoolfan.com

12032 Blower Series



Demensions: 120X120X32 mm
Bearing Type: Ball Bearing
Function Type: FG/RD Signal,PWM pulse
Protection: Auto Restart Protection or General Options

SPECIFICATIONS

MODEL NO	VOLTAGE	CURRENT	POWER	SPEED	AIR FLOW		STATIC PRESSURE		NOISE	CURVE
	V	A	W	RPM	CMM	CFM	mmH2O	INH2O	(dBA)	
12032BVL-N(P/M)1	12	0.09	1.08	1500	0.414	14.62	3.65	0.144	37.0	L
12032BVM-N(P/M)1	12	0.45	5.40	2500	0.754	26.60	17.41	0.685	49.9	M
12032BVH-N(P/M)1	12	1.90	22.80	3500	1.055	37.24	36.22	1.466	56.6	H
12032BVL-N(P/M)2	24	0.25	6.00	1500	0.414	14.62	3.65	0.144	37.0	L
12032BVM-N(P/M)2	24	0.60	14.40	2500	0.754	26.60	17.41	0.685	49.9	M
12032BVH-N(P/M)2	24	1.00	24.00	3500	1.055	37.24	36.22	1.466	56.6	H
12032BVL-N(P/M)4	48	0.10	4.80	1500	0.414	14.62	3.65	0.144	37.0	L
12032BVM-N(P/M)4	48	0.30	14.40	2500	0.754	26.60	17.41	0.685	49.9	M
12032BVH-N(P/M)4	48	0.60	28.80	3500	1.055	37.24	36.22	1.466	56.6	H

PERFORMANCE CURVES

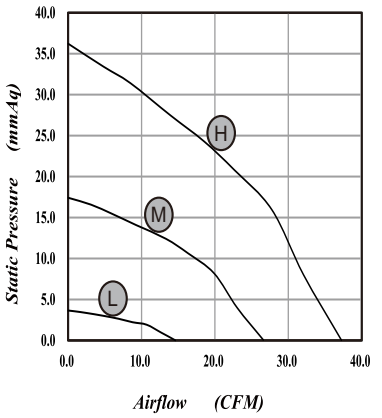

DIMENSIONS DRAWING

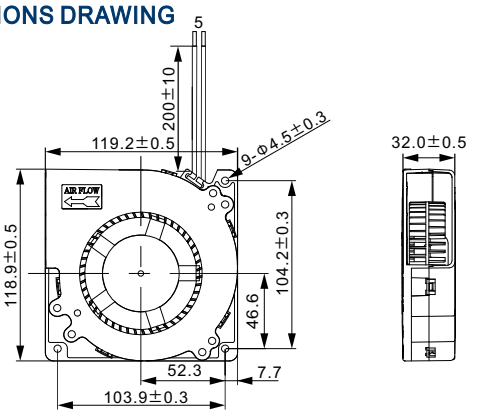

*Specifications are subject to change without notice

BeCool
www.becoolfan.com

133 Centrifugal Series



Demensions: Φ133X69 mm
Bearing Type: Ball Bearing
Function Type: FG/RD Signal,PWM pulse
Protection: Auto Restart Protection or General Options

SPECIFICATIONS

MODEL NO	VOLTAGE	CURRENT	POWER	SPEED	AIR FLOW		STATIC PRESSURE		NOISE	CURVE
	V	A	W	RPM	CMM	CFM	mmH_2O	INH_2O	(dBA)	
133BVL-N(P/M)2	24	1.00	24.00	3000	3.457	122.10	23.40	0.921	57.0	L
133BVM-N(P/M)2	24	1.80	43.20	3500	4.086	144.32	31.62	1.244	60.5	M
133BVH-N(P/M)2	24	3.00	72.00	4000	4.695	165.81	41.18	1.621	63.4	H
133BVL-N(P/M)4	48	1.50	72.00	3000	3.457	122.10	23.40	0.921	57.0	L
133BVM-N(P/M)4	48	2.00	96.00	3500	4.086	144.32	31.62	1.244	60.5	M
133BVH-N(P/M)4	48	2.50	120.00	4000	4.695	165.81	41.18	1.621	63.4	H

PERFORMANCE CURVES

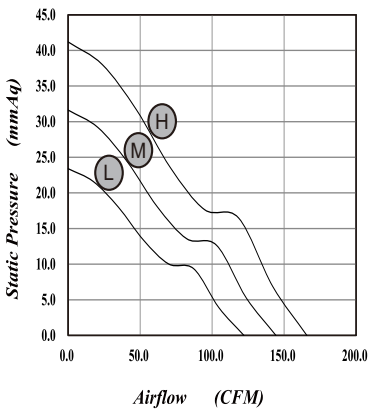

DIMENSIONS DRAWING

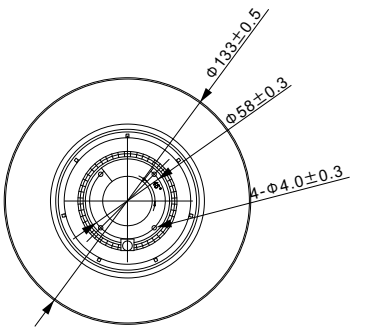

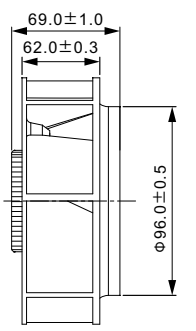

*Specifications are subject to change without notice

BeCool
www.becoolfan.com

175 Centrifugal Series



Demensions: Φ175X69 mm
Bearing Type: Ball Bearing
Function Type: FG/RD Signal,PWM pulse
Protection: Auto Restart Protection or General Options

SPECIFICATIONS

MODEL NO	VOLTAGE	CURRENT	POWER	SPEED	AIR FLOW		STATIC PRESSURE		NOISE	CURVE
	V	A	W	RPM	CMM	CFM	mmH_2O	INH_2O	(dBA)	
175BVL-N(P/M)2	24	1.00	24.00	2500	7.167	253.12	25.06	0.986	64.7	L
175BVM-N(P/M)2	24	2.00	48.00	3000	8.563	302.40	36.48	1.436	68.7	M
175BVH-N(P/M)2	24	3.00	72.00	3500	9.671	341.54	43.40	1.708	72.0	H
175BVL-N(P/M)4	48	1.00	48.00	2500	7.167	253.12	25.06	0.986	64.7	L
175BVM-N(P/M)4	48	2.00	96.00	3000	8.563	302.40	36.48	1.436	68.7	M
175BVH-N(P/M)4	48	2.50	120.00	3500	9.671	341.54	43.40	1.708	72.0	H

PERFORMANCE CURVES

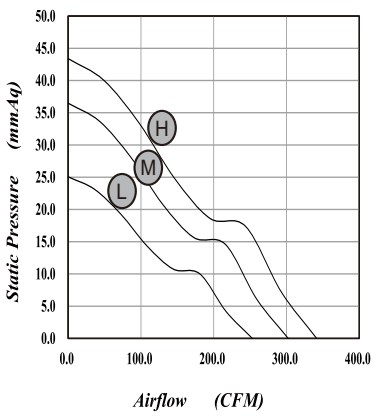

DIMENSIONS DRAWING

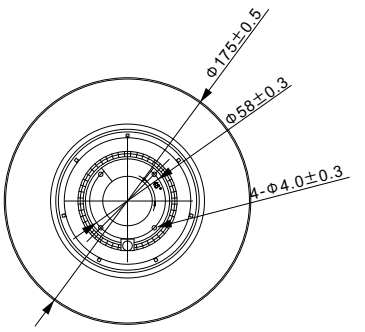

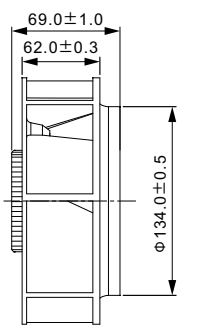

*Specifications are subject to change without notice

BeCool
www.becoolfan.com

190 Centrifugal Series

Demensions: Φ189X69 mm
Bearing Type: Ball Bearing
Function Type: FG/RD Signal,PWM pulse
Protection: Auto Restart Protection or General Options



SPECIFICATIONS

MODEL NO	VOLTAGE	CURRENT	POWER	SPEED	AIR FLOW		STATIC PRESSURE		NOISE	CURVE
	V	A	W	RPM	CMM	CFM	mmH_2O	INH_2O	(dBA)	
190BVL-N(P/M)2	24	0.90	21.60	2000	1.207	42.63	16.83	0.662	50.5	L
190BVM-N(P/M)2	24	1.80	43.20	2500	1.572	55.54	30.25	1.190	57.5	M
190BVH-N(P/M)2	24	3.00	72.00	3000	2.173	76.77	58.65	2.309	65.0	H
190BVL-N(P/M)4	48	1.00	48.00	2000	1.207	42.63	16.83	0.662	50.5	L
190BVM-N(P/M)4	48	2.00	96.00	2500	1.572	55.54	30.25	1.190	57.5	M
190BVH-N(P/M)4	48	2.50	120.00	3000	2.173	76.77	58.65	2.309	65.0	H

PERFORMANCE CURVES

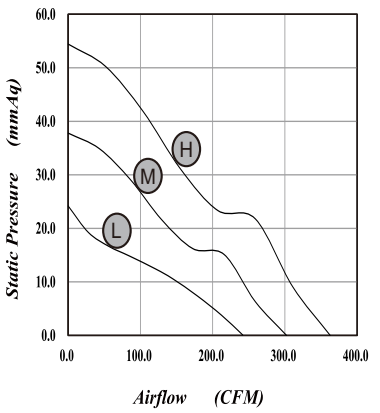

DIMENSIONS DRAWING

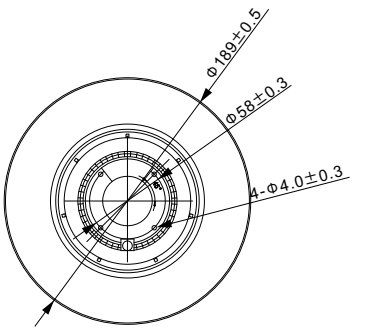

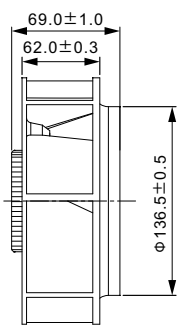

*Specifications are subject to change without notice

BeCool
www.becoolfan.com

225 Centrifugal Series



Demensions: Φ225X99 mm
Bearing Type: Ball Bearing
Function Type: FG/RD Signal,PWM pulse
Protection: Auto Restart Protection or General Options

SPECIFICATIONS

MODEL NO	VOLTAGE	CURRENT	POWER	SPEED	AIR FLOW		STATIC PRESSURE		NOISE	CURVE
	V	A	W	RPM	CMM	CFM	mmH_2O	INH_2O	(dBA)	
225BVH-N(P/M)2	24	4.80	115.20	2000	14.223	502.30	26.85	1.057	58.0	H
225BVH-N(P/M)4	48	2.50	120.00	2000	14.223	502.30	26.85	1.057	58.0	H

PERFORMANCE CURVES

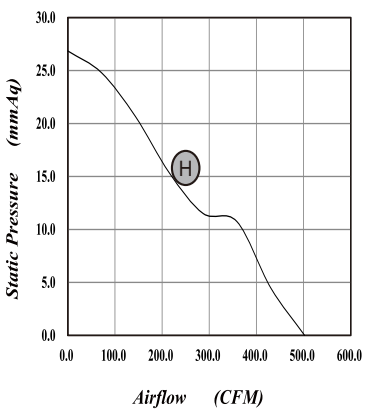

DIMENSIONS DRAWING

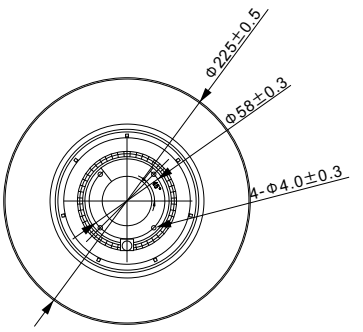

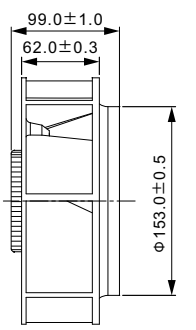

*Specifications are subject to change without notice

BeCool
www.becoolfan.com

250 Centrifugal Series

Demensions: Φ250X92.8 mm
Bearing Type: Ball Bearing
Function Type: FG/RD Signal,PWM pulse
Protection: Auto Restart Protection or General Options



SPECIFICATIONS

MODEL NO	VOLTAGE	CURRENT	POWER	SPEED	AIR FLOW		STATIC PRESSURE		NOISE	CURVE
	V	A	W	RPM	CMM	CFM	mmH_2O	INH_2O	(dBA)	
250BVH-N(P/M)2	24	8.00	192.00	2500	18.115	639.73	68.16	2.683	73.5	H
250BVH-N(P/M)4	48	4.00	192.00	2500	18.115	639.73	68.16	2.683	73.5	H

PERFORMANCE CURVES

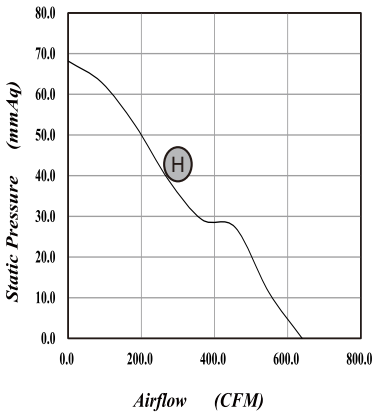

DIMENSIONS DRAWING

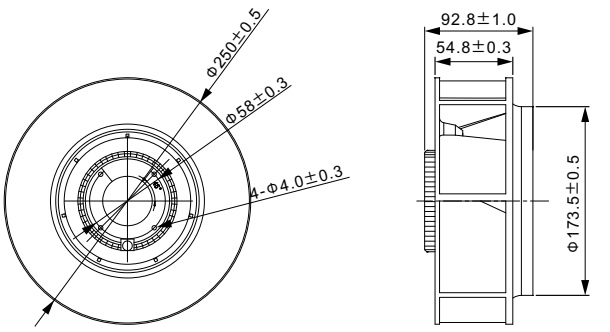

*Specifications are subject to change without notice